This is a digital copy of a book that was preserved for generations on library shelves before it was carefully scanned by Google as part of a project to make the world's books discoverable online.

It has survived long enough for the copyright to expire and the book to enter the public domain. A public domain book is one that was never subject to copyright or whose legal copyright term has expired. Whether a book is in the public domain may vary country to country. Public domain books are our gateways to the past, representing a wealth of history, culture and knowledge that's often difficult to discover.

Marks, notations and other marginalia present in the original volume will appear in this file - a reminder of this book's long journey from the publisher to a library and finally to you.

Usage guidelines

Google is proud to partner with libraries to digitize public domain materials and make them widely accessible. Public domain books belong to the public and we are merely their custodians. Nevertheless, this work is expensive, so in order to keep providing this resource, we have taken steps to prevent abuse by commercial parties, including placing technical restrictions on automated querying.

We also ask that you:

+ *Make non-commercial use of the files* We designed Google Book Search for use by individuals, and we request that you use these files for personal, non-commercial purposes.

+ *Refrain from automated querying* Do not send automated queries of any sort to Google's system: If you are conducting research on machine translation, optical character recognition or other areas where access to a large amount of text is helpful, please contact us. We encourage the use of public domain materials for these purposes and may be able to help.

+ *Maintain attribution* The Google "watermark" you see on each file is essential for informing people about this project and helping them find additional materials through Google Book Search. Please do not remove it.

+ *Keep it legal* Whatever your use, remember that you are responsible for ensuring that what you are doing is legal. Do not assume that just because we believe a book is in the public domain for users in the United States, that the work is also in the public domain for users in other countries. Whether a book is still in copyright varies from country to country, and we can't offer guidance on whether any specific use of any specific book is allowed. Please do not assume that a book's appearance in Google Book Search means it can be used in any manner anywhere in the world. Copyright infringement liability can be quite severe.

About Google Book Search

Google's mission is to organize the world's information and to make it universally accessible and useful. Google Book Search helps readers discover the world's books while helping authors and publishers reach new audiences. You can search through the full text of this book on the web at `http://books.google.com/`

TRACTOR PRINCIPLES

WHITMAN

LIBRARY
UNIVERSITY OF CALIFORNIA
DAVIS

LIBRARY
UNIVERSITY OF CALIFORNIA
DAVIS

TRACTOR PRINCIPLES

TRACTOR PRINCIPLES

THE ACTION, MECHANISM, HANDLING, CARE, MAINTENANCE AND REPAIR OF THE GAS ENGINE TRACTOR

BY

ROGER B. WHITMAN

AUTHOR OF "MOTOR CAR PRINCIPLES," "GAS ENGINE PRINCIPLES," "MOTOR-CYCLE PRINCIPLES," ETC.

FULLY ILLUSTRATED

D. APPLETON AND COMPANY

NEW YORK LONDON

1920

LIBRARY
UNIVERSITY OF CALIFORNIA
DAVIS

COPYRIGHT, 1920, BY
D. APPLETON AND COMPANY

PRINTED IN THE UNITED STATES OF AMERICA

FOREWORD

The tractor of to-day is built in almost as many types and designs as there are tractor makers, and is far from being as standard as the automobile. There are tractors with one driving wheel, with two driving wheels, with three and with four, as well as three arrangements of the crawler principle; there are two-wheelers, three-wheelers and four-wheelers; tractors that are controlled by pedals and levers and tractors that are driven by reins.

Thus if a man who is competent to handle and care for one make is given another make to run, he may be entirely at a loss as to how it works and how it should be handled.

It is the purpose of this book to explain and describe all of the mechanisms that are in common use in tractor construction, to the end that the reader may be able to identify and understand the parts of whatever make he may see or handle.

CONTENTS

CHAPTER I

TRACTOR PRINCIPLES

PAGE

Comparison between tractors and automobiles—What is required for each—Advantage of understanding the mechanism—No standard tractor design—Principal parts of a tractor—Necessity for each . . 1

CHAPTER II

ENGINE PRINCIPLES

Power attained from heat—Combustible mixture—Principle of engine operation—Combustion space—Gas engine cycle—Dead strokes—Flywheel—Starting an engine—Inlet stroke—Compression stroke—Importance of compression—Ignition—Advance and retard of ignition—Power stroke—Exhaust stroke—Production of power—Vertical and horizontal engines—Firing order 9

CHAPTER III

ENGINE PARTS

Base — Bearings — Cylinders — Crankshaft — Piston—Connecting rod—Wrist pin—Piston rings—Valves—Cam—Valve mechanisms—Cooling system 30

CHAPTER IV

FUELS AND CARBURETION

Oxygen necessary for combustion—Forming a mixture—Rich and poor mixtures—Carbon—Preignition—

PAGE

Carbureter—Spray nozzle—Evaporation of fuels—Carbureter principles—Extra air inlet—Effect of heat on mixture—Loading—Strangler 52

CHAPTER V

CARBURETERS

Carbureter parts—Manifold—Action of carbureter—Float feed—Kerosene and gasoline—Descriptions of carbureters—Pump feed—Use of water in the mixture—Application of heat—Fuel pumps—Air cleaners—Governors 70

CHAPTER VI

IGNITION

Principle of ignition—Point of ignition—Preignition—Advance and retard—Parts of ignition system—Magnetism—Induction—Magneto—Action of armature—Armature windings—Circuit breaker—Circuit—Shuttle and inductor armatures—Sparking current—Grounded circuit—Magneto parts—Impulse starter 102

CHAPTER VII

BATTERY IGNITION SYSTEMS

Principle of spark coil—Windings—Timer—Atwater-Kent system—Vibrator—Spark plugs 131

CHAPTER VIII

TRANSMISSION

Transmission parts—Clutches—Necessity for change speed gear—High and low gear—Types of change speed gears—Necessity for differential—Principle of differential—Drives—Worm 143

PAGE

CHAPTER IX

TRACTOR ARRANGEMENT

Tractor requirements—Tractor types—Engine position —Front axles—Spring supports 167

CHAPTER X

LUBRICATION

Importance of lubrication—Effect of oil—Kinds of oil—Effect of temperature on oil—Using the right kind of oil — Burning point — Viscosity — Lubrication charts—Oiling systems—Oil pumps—Mechanical oiler—Oil cup—Grease cup 175

CHAPTER XI

TRACTOR OPERATION

Using a new tractor—Breaking in—Daily inspection—Driving—Shifting gears—Driving on hills—Using the engine as a brake—Cold weather conditions—Starting in cold weather—Protection against freezing—Starting a tractor 201

CHAPTER XII

ENGINE MAINTENANCE

Fuel system and carbureter—Carbureter adjustment—Dirt in the fuel—Running on kerosene—Care—Magneto and ignition system—Care of magneto—Smoothing platinum points—Adjustment—Timing a magneto—Testing a magneto—Ignition trouble—Compression—Testing for compression leaks—Valve grinding—Valve timing—Carbon—Removing carbon 213

PAGE

CHAPTER XIII

LOCATING TROUBLE

Engine will not start—Engine loses power—Engine stops—Engine misses—Engine starts; but stops—Engine overheats—Engine smokes 245

CHAPTER XIV

CAUSES OF TROUBLE

Troubles and their causes in tabular form 259

ILLUSTRATIONS

FIG.		PAGE
1	The Gas Engine Cycle	15
2	1-cylinder power diagram	21
3	2-cylinder power diagram	22
4	2-cylinder power diagram, 180 shaft	24
5	H. D. O. power diagram	26
6	4-cylinder power diagram	27
7	2-cylinder crank shaft	31
8	4-cylinder crank shaft	32
9	Half of a plain bearing	32
10	Connecting rod bearings	33
11	Piston complete and in section	34
12	Wrist pin fastenings	36
13	Valve	38
14	Action of cam	39
15	"Twin City" tractor engine	41
16	"Hart-Parr" valve mechanism	43
17	"Hart-Parr" engine	45
18	"Oil Pull" engine	47
19	Horizontal double opposed engine	49
20	"Monarch" engine	51
21	Principle of carburetor	59
22	Principle of extra air inlet	64
23	"Kingston" carburetor, model L	72
24	"Kingston" carburetor, model E	75

FIG.		PAGE
25	"Kingston" carburetor, dual model	77
26	"E-B" carburetor	79
27	"E-B" carburetor, side view	81
28	Pump-fed carburetor	82
29	"Titan" carburetor	84
30	Pump-fed carburetor with two fuel nozzles	85
31	"Hart-Parr" mixture heater	87
32	"Twin City" manifold	88
33	Fuel pump	90
34	"Avery" fuel connections	92
35	"Oil Pull" fuel system	93
36	Air washer	95
37	Air strainer	96
38	"E-B" governor	97
39	"Case" governor	98
40	"Hart-Parr" governor	99
41	Vertical governor	101
42	Armature	107
43	Flow of magnetism through armature core	108
44	One complete revolution of the armature	111
45	Connections of Bosch magneto	112
46	"K-W" inductor	115
47	"K-W" inductor in three positions	117
48	"Dixie" inductor	118
49	Three positions of "Dixie" inductor	120
50	"Bosch" circuit breaker	121
51	"K-W" circuit breaker	122
52	"Bosch" magneto in section	126
53	"K-W" magneto in section	129
54	Magnetism in a copper wire	132
55	Magnetism from electricity	133

FIG.		PAGE
56	Principle of spark coil	134
57	"Atwater-Kent" ignition system	136
58	Vibrator coil ignition system	139
59	Spark plug	141
60	Internal clutch	144
61	Plate clutch	147
62	Principle of sliding gear	155
63	Principle of jaw clutch change speed gear	157
64	"I. H. C." chain drive, showing differential	162
65	"Case" rear axle	163
66	"Oil Pull" rear axle	164
67	Driving worm	165
68	Tractor arrangement	168
69	Tractor arrangement	169
70	"Gray" tractor	171
71	Types of front axles	172
72	Spring support	173
73	"Mogul" oiling diagram	180
74	"Illinois" oiling diagram	183
75	End of "Twin City" connecting rod	185
76	Wrist pin lubrication	186
77	Force feed oiling system of "Gray" engine	187
78	Oil pump	188
79	"E-B" oil pump	189
80	Oil pump with hollow plunger	190
81	Methods of preventing oil leaks	191
82	"Titan" lubricator	192
83	"I. H. C." method of oiling crank pins	193
84	"Hart-Parr" oiling system	194
85	Oil cup	195
86	Proper use of a grease cup	196

FIG.		PAGE
87	"Titan" 10-20 oiling diagram	198
88	"International" oiling diagram	199
89	Grinding valve in engine with fixed head	231
90	Grinding valve in detachable head	233
91	Grinding valve in detachable seat	234
92	Valve seat cutter	235
93	"Holt" valve arrangement	236
94	Valve timing, using marks on flywheel	238
95	Valve timing	239
	Index	261

TRACTOR PRINCIPLES

greater part of its life it develops only a portion of the power of which it is capable.

A tractor, on the other hand, is intended not to carry, but to haul. It must run and do its work on rough hillsides, soft bottoms, or any other land where it is required to go. Instead of developing speed it develops pulling power, and must be able to develop its full power continuously.

Appearance and comfort count for a great deal in an automobile, and much attention is devoted to making it noiseless and simple to manage. These things do not apply in a tractor, which is a labor-saving and money-making machine, valuable only for the work that it can do. There is no question of upholstery or nickel-plating; all that is wanted is a machine that will do the required work with the least possible cost of operation.

As is the case with any kind of machine that is purchased as a money-maker, its cost should be as low as is consistent with its ability to do its work. Any extra cost for

accessories, or finish, or other detail, is wasted unless it permits the machine to do more work, or, by making the operator more comfortable, allows him to run the machine for a longer stretch of time or with greater efficiency.

It may be taken for granted that any tractor will run and will do its work with satisfaction, provided it is sensibly handled and cared for. Far more troubles and breakdowns come from careless handling and from neglect than from faulty design and material. A tractor that is running and doing its work is earning a return on the money invested in it; when it is laid up for repairs there is not only a loss of interest on the investment, but a loss of the value of the work that it might be doing.

To keep a tractor running is a matter only of understanding and of common sense; common sense to realize that any piece of machinery needs some degree of care and attention, and understanding of where the care

and attention should be applied. The more thoroughly a tractor operator understands his machine, the more work he will be able to get out of it, and the more continuously it will run. This is only another way of saying that understanding and knowledge pay a direct return in work done and money earned.

In the early days of the automobile there were as many types of cars as there were manufacturers. As time has gone on, the unsatisfactory ideas have been weeded out, and automobiles have approached what may be called a standard design.

At the present time, tractor designs are varied, and it is hardly possible to speak of any type as standard. The reason for this lies in the fact that many manufacturers start with a design for one special part, and build the tractor around it.

For example, a manufacturer may develop a method of driving the wheels that he feels is especially good for tractor work. In applying it he may find that the engine must be

so placed on the frame that when the power pulley is in position the belt will interfere with the front wheels unless they are small; he therefore uses small front wheels, and advocates them for tractors.

Another manufacturer with a patent steering gear may be able to place the power pulley so that there is ample clearance for the belt; he finds that by using high front wheels he can get a better support for the frame, and therefore claims that high front wheels are an advantage.

Other designs may be based on having three wheels, or two; advantages are claimed for each type, and each type undoubtedly has them.

The selection of a tractor is based on one's own experience or on that of neighbors, or on the ability of the salesman to bring out the advantages of the make that he sells; but when the tractor is bought and delivered, its ability to do the work promised for it de-

pends solely on the care with which it is handled and looked after.

Whatever the design of a tractor may be, there are certain parts that it must have in order to do the work required of it. These parts, or groups of parts, are as follows:

Engine.—This furnishes the power by which the tractor operates.

Clutch.—By means of a clutch the engine may be connected with the mechanism, so that the tractor moves, or it may be disconnected, so that it may run without moving the tractor.

Change Speed Gear.—As will be explained in later chapters, an engine, in order to work most efficiently, should run at a fixed speed; the tractor should be able to run fast or slow, according to conditions. A change speed gear is therefore provided, by which the speed of the tractor may be changed, although there is no change in the speed of the engine.

Drive.—The drive is the mechanism that

applies the power of the engine to the wheels, and makes them turn.

Differential.—When a tractor makes a turn, the outside wheels cover a larger circle than the inside wheels, and therefore must run faster in order to get around in the same time. It is usually the case that the power of the engine is applied to both driving wheels; if both were solid on the axle, like the wheels of a railroad car, one would be forced to slip when making a turn, which would waste power. By applying a differential, the engine can drive both wheels, but the wheels may run at different speeds when conditions require it.

The clutch, change speed gear, drive and differential form the *transmission.*

Steering gear.—By means of the steering gear the direction in which the tractor moves may be changed.

Supports.—A tractor moves on broad-tired wheels, or on crawlers, which are so formed that they grip the ground and do not slip.

They give so broad a support that even on soft ground the weight of the tractor will not pack the soil sufficiently to injure it as a seed bed.

Frame.—The frame is the foundation of the tractor, and holds the parts in the proper relation to each other. It is usually made of channel steel, the parts being bolted to it; in some tractors, however, the parts are so attached to each other that they form their own support, and no other frame is needed.

Tractor manufacturers make these parts in different ways; all accomplish the same result, but do it by different methods. The main principles are much the same, and should be known and understood. They are described and explained in the succeeding chapters.

CHAPTER II

ENGINE PRINCIPLES

THE working part of a tractor is the engine; it is this that furnishes the power that makes the machine go.

The engine gets its power from the burning of a mixture of fuel vapor and air. When this mixture burns, it becomes heated, and, as is usual with hot things, it tries to expand, or to occupy more room.

The mixture is placed in a cylinder, between the closed end and the piston; it is then heated by being burned, and, in struggling to expand, it forces the piston to slide down the cylinder. This movement of the piston makes the crank shaft revolve, which in turn drives the tractor.

The first step in making the engine run is to put a charge of mixture into the cylinder,

and it is clear that if the burning of the charge is to move the piston, the piston must be in such a position that it is able to move. When the mixture is burned, the piston must therefore be at the closed end of the cylinder.

After the charge of mixture has been burned, the cylinder must be cleared of the dead and useless gases that remain, in order to make room for a fresh charge.

The charge of mixture is drawn into the cylinder just as a pump sucks in water. At a time when the piston is at the closed end of the cylinder, a valve is opened connecting the space above the piston with the device that forms the mixture; then by moving the piston outward, mixture is sucked into the space above it. When the piston reaches the end of its stroke the cylinder has been filled with mixture, and the valve then closes.

It would be useless to set fire to the mixture at that time, for the piston is as far down the cylinder as it can be, and pressure could not move it any farther. To get the

piston into such a position that the expanding mixture can move it, it is forced back to the closed end of the cylinder. This squeezes or *compresses,* the cylinderful of mixture into the small space, called the *combustion chamber,* between the piston and the cylinder head.

If the mixture is now burned, the piston can move the length of the cylinder, and in so doing it develops power.

The cylinder is cleared of the burned and useless gases by opening a valve and pushing them out by moving the piston back to the inner end of the cylinder. When this has been done, the valve is closed, and, by opening the inlet valve and moving the piston outward, a fresh charge is sucked in, and the several steps of the *gas engine cycle* are repeated.

The name *cycle* is given to any series of steps or events that must be gone through in order that a thing may happen. Thus the empty shell must be taken out of a gun and

a fresh cartridge put in before the gun can be fired again, and that series of steps might be called the gun cycle.

The gas engine cycle requires the piston to make four strokes. An outward stroke sucks in a charge of mixture, and an inward stroke returns the piston to the firing position and compresses the charge. Then comes the outward stroke when the piston moves under power, followed by the inward stroke that clears the cylinder of the burned gases.

For every stroke of the piston the crank shaft makes a half-revolution; the crank shaft therefore makes two revolutions to four strokes of the piston and to each repetition of the gas engine cycle.

Of these four strokes of the piston only one produces power. The other three strokes, called the *dead strokes,* are required to prepare for another power stroke.

A gas engine cylinder thus produces power for only one quarter of the time that it runs. This is one of the striking differences be-

tween the gas engine and the steam engine, for the piston of a steam engine moves under power all of the time that the engine runs.

A one-cylinder gas engine must have something to make the piston go through the dead strokes, for otherwise the piston would stop at the end of the power stroke; the piston is kept in motion by heavy flywheels attached to the crank shaft. These, like any object, try to continue in motion when once they are started; a power stroke starts the crank shaft revolving and its flywheels keep it going.

Thus, the piston drives the crank shaft during the power stroke, and the crank shaft drives the piston during the dead strokes.

To start an engine, the crank shaft is revolved to make the piston suck in a charge of mixture and compress it; then the charge is burned, the power stroke takes place, and the engine runs.

A clear idea of what goes on inside of the cylinder is quite necessary in order to take proper care of an engine and to get the best

work out of it. The following description applies to any cylinder, for the action in all cylinders of an engine is the same.

Inlet Stroke.—During the inlet stroke (No. 1, Fig. 1), the piston moves outward; the inlet valve is open, and the exhaust valve is closed. This movement of the piston creates suction, and if there are leaks in the cylinder, air will be sucked in and will spoil the proportions of the charge. This will prevent the proper burning of the mixture, and the engine will lose power.

The piston moves at such high speed that the mixture cannot enter fast enough to keep up with it; mixture is still flowing in when the piston reaches the end of its stroke, and even when it begins to move inward on the next stroke. The more mixture there is in the cylinder, the more powerfully the engine will run; the inlet valve is therefore held open for as long a time as the mixture continues to enter.

In slow-speed 1-cylinder and 2-cylinder en-

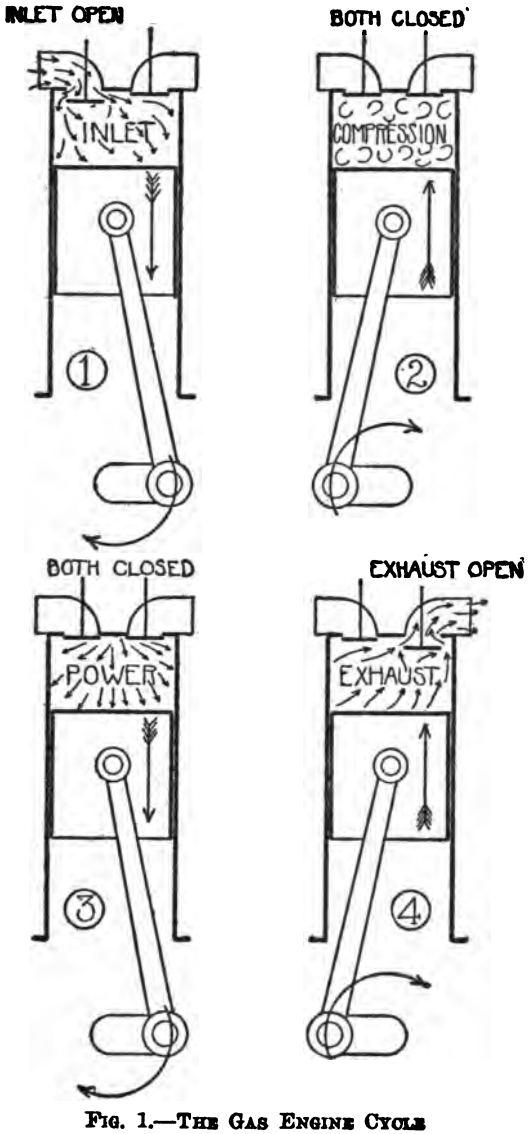

FIG. 1.—THE GAS ENGINE CYCLE

gines the valve closes when the piston reaches the end of its stroke; on high-speed engines the valve does not close until the piston has moved ¼ inch or ½ inch on the compression stroke.

Compression Stroke.—During the compression stroke (No. 2, Fig. 1) the piston moves inward, and both valves are closed. This movement places the piston in position to move outward on the power stroke. As the outlets to the cylinder are closed, the charge of mixture cannot escape, and is therefore compressed into the space between the piston and the cylinder head when the piston is at the inner end of its stroke. This space is usually about one quarter the volume of the cylinder; the charge is therefore compressed to about one quarter of its original volume.

This compression of the charge is very important in the operation of the gas engine, and any interference with it will make the engine run poorly.

In the first place, it improves the quality

of the charge, and makes it burn very much better. When the charge enters the cylinder, the fuel vapor and air are not thoroughly mixed; much of the fuel is not turned into vapor. By compressing the charge it becomes heated; this vaporizes the fuel, and vapor and air become thoroughly mixed.

Compression also increases the power. Suppose that the cylinder contains a quart of mixture which, when heated, will expand to a gallon. If this quart of mixture is compressed to a half pint, it will not lose its ability to expand to a gallon, and will exert more pressure in expanding from a half pint to a gallon than from a quart to a gallon.

A leaky cylinder will cause a further loss of power because some of the charge will escape during the compression stroke, which will leave less to be burned and to develop power.

Ignition.—Setting fire to the charge of mixture is called the *ignition* of the charge, and it takes place close to the end of the com-

pression stroke. To get the greatest power, all of the mixture should be on fire and heated most intensely as the piston begins the power stroke.

When the mixture is set on fire, it does not explode like gunpowder, but burns comparatively slowly; the charge is ignited by an electric spark, and the flame spreads from that point until it is all on fire. In order to give the flame time to spread, the spark passes sufficiently before the end of the compression stroke to have the entire charge on fire as the power stroke begins. This is called the *advance* of the ignition.

The flame takes the same time to spread through the charge when the engine is running fast as when it is running slow. Therefore if the engine is speeded up, the spark must be advanced, for otherwise the piston would be on the power stroke before the flame would have time to spread all through the mixture.

When the engine is slowed down, the spark

must have less advance, or must be *retarded*, for, if it were not, the charge would all be in flame, and exerting its full pressure, before the piston reached the end of its compression stroke.

The subject of ignition, which is of great importance, is covered more fully in Chapter VI.

Power Stroke.—During the power stroke (No. 3, Fig. 1) the piston moves outward, and both valves are closed. As it begins, the mixture is all on fire, and great pressure is exerted against the piston.

As the piston moves outward the combustion space becomes larger, and the gases obtain the room for expansion that they seek. As they expand, the pressure that they exert becomes less. By the time the piston is three quarters the way down the power stroke, the pressure is so reduced that it has little or no effect; the gases are still trying to expand, however, so the exhaust valve is

opened at that point, and they begin to escape.

Exhaust Stroke.—During the exhaust stroke (No. 4, Fig. 1) the piston moves inward and the exhaust valve is open. This movement of the piston pushes the burned gases out of the cylinder, and it is clear that the more thoroughly the cylinder is emptied of them, the more room there will be for a fresh charge.

In high-speed engines the gases cannot escape as fast as the piston moves; they are still flowing out when the end of the stroke is reached. Therefore the valve is closed, not at the end of the stroke, but when the piston has moved about ⅛ inch outward on the inlet stroke. The inlet valve opens as the exhaust valve closes.

It can be seen that through the inlet and compression strokes a leak will reduce the charge and so interfere with the production of full power. The piston must make a tight fit in the cylinder, the valves must seat

tightly, and gaskets and other parts must be in proper condition.

Figure 2 shows a power diagram for a 1-cylinder engine, in which the crank shaft

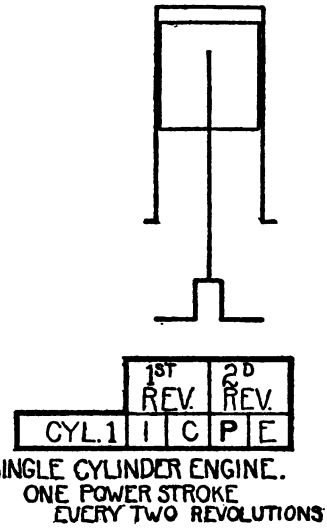

FIG. 2.—1-CYLINDER POWER DIAGRAM

moves under power during one stroke out of every four. An engine with two cylinders can be built so that first one cylinder applies power and then the other, in which case the

crank shaft moves under power during two strokes out of every four.

Figure 3 is a power diagram of an engine

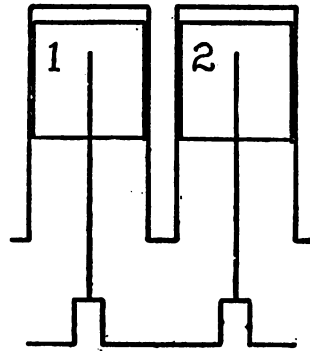

	1ST REV.		2D REV.	
CYL. 1	I	C	P	E
CYL. 2	P	E	I	C

2-CYL. VERTICAL
360° SHAFT

FIG. 3.—2-CYLINDER POWER DIAGRAM

of this sort. If piston 1 is moving down under power, piston 2 is also moving down, but on the inlet stroke. The following stroke is exhaust in cylinder 1 and compression in cyl-

inder 2, and cylinder 2 will then deliver a power stroke while cylinder 1 is on inlet. Thus the crank shaft will receive a power stroke, followed by a dead stroke; then another power stroke and another dead stroke, and so on.

There will be the disadvantage, however, that the pistons, moving up and down together, will cause vibration, which in the course of time will be likely to give trouble. To overcome this, a 2-cylinder engine can be built as indicated in Figure 4.

In this engine the cranks project on opposite sides of the crank shaft instead of on the same side, as in Figure 3; the pistons thus move in opposite directions, and produce no vibration. Power will be unevenly applied, however, for both power strokes occur in one revolution, with two dead strokes in the succeeding revolution.

With piston 1 moving down on power, piston 2, moving upward, can only be performing compression or exhaust. If it is on com-

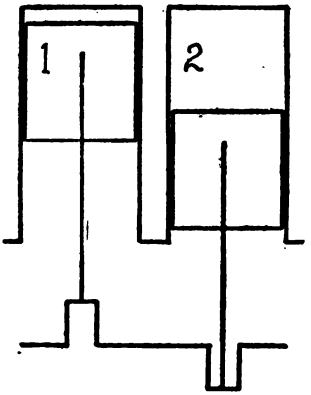

	1ST REV.		2D REV.	
CYL. 1	I	C	P	E
CYL. 2	C	P	E	I
OR				
CYL. 1	I	C	P	E
CYL. 2	E	I	C	P

2 CYL. VERTICAL
180° SHAFT.

FIG. 4.—2-CYLINDER POWER DIAGRAM, 180 SHAFT

pression, its power stroke will follow the power stroke of piston 1, while if it is on exhaust its power stroke will have occurred immediately before the power stroke of piston

1. In either case one power stroke follows the other, taking place in one revolution of the crank shaft, while in the following revolution both pistons will be performing dead strokes.

While there is no vibration from the movement of the pistons in this engine, the uneven production of power will produce vibration of another kind.

These two types may be built with the cylinders standing up or lying down; that is, they may be either *vertical engines* or *horizontal engines*. The *double opposed* engine, which is built only in horizontal form, is free from either kind of vibration, but has the disadvantage of occupying more room than the others. The cylinders, instead of being side by side, and on the same side of the crank shaft, are placed end to end, with the crank shaft between them, as shown in Figure 5.

The pistons make their inward and out-

ward strokes together, but in so doing they move in opposite directions. Thus every power stroke is followed by a dead stroke, as in the engine shown in Figure 3, while the movement of one piston balances that of the

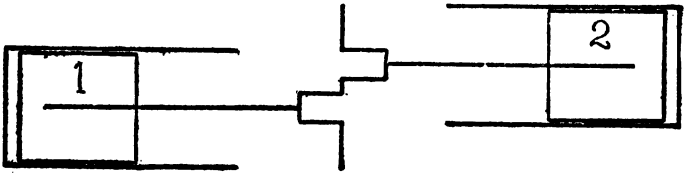

	1ST REV.		2D REV.	
CYL. 1	I	C	P	E
CYL. 2	P	E	I	C

HORIZONTAL OPPOSED ENGINE

FIG. 5.—H. D. O. POWER DIAGRAM

other, as is the case with the engine shown in Figure 4.

In a 4-cylinder engine one power stroke follows another without any dead stroke intervals, which, of course, makes the crank shaft revolve more smoothly and with a steadier application of power. The power

diagram is shown in Figure 6; in studying this it should be remembered that if two pis-

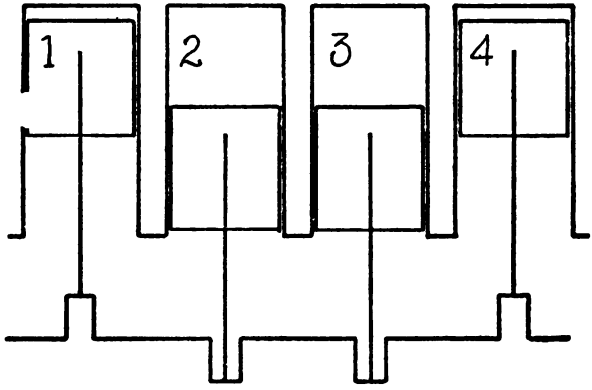

	1ST REV		2D REV			1ST REV		2D REV	
CYL 1	I	C	P	E		I	C	P	E
CYL 2	C	P	E	I	OR	E	I	C	P
CYL 3	E	I	C	P		C	P	E	I
CYL 4	P	E	I	C		P	E	I	C

FOUR CYLINDER ENGINE

FIG. 6.—4-CYLINDER POWER DIAGRAM

tons move in opposite directions, as in Figure 4, one power stroke follows another, while if they move in the same direction, as

in Figure 3, there is an interval of one stroke between their power strokes.

The crank shaft of a 4-cylinder engine is so made that the middle pistons move in the same direction, and opposite to the end pistons. This construction has been found to make a smoother running engine than if pistons 1 and 3 moved one way while pistons 2 and 4 moved the other.

If piston 1 is on the power stroke, either piston 2 or piston 3 can follow, for they are moving in the opposite direction. If we say that piston 2 is the next, then piston 4 must be the third to give a power stroke, for it is the only one left that is moving in the opposite direction to piston 2. Piston 3 is thus the fourth to move under power, and it is followed by another power stroke by piston 1; the *firing order* is then said to be 1, 2, 4, 3.

If it is piston 3 that follows piston 1, piston 4 will again be the third to produce power, and piston 2 will be the fourth. The firing order will then be 1, 3, 4, 2. There is no

other order in which a 4-cylinder engine can produce power, and there is no choice between them.

The firing order of an engine is established by the manufacturer, and depends on the order in which the valves are operated.

CHAPTER III

ENGINE PARTS

THE foundation of an engine is the *base*, which supports the *bearings* in which the crank shaft revolves, and to which the cylinders are attached. The cylinders of tractor engines are made of cast iron, and the cylinder heads, which close the upper ends of the cylinders, are usually in a separate piece, bolted on. The joint between the cylinders and the cylinder head is made tight by placing between them a *gasket* of asbestos and thin sheet metal.

The crank shaft has as many cranks, or *throws*, as the engine has cylinders. Crank shafts for 2-cylinder engines are shown in Figure 7; the upper one is for an engine of the type shown in Figure 3, with pistons moving in the same direction. With both cranks

projecting from one side the shaft is out of balance, so *balance weights* are attached to the opposite side.

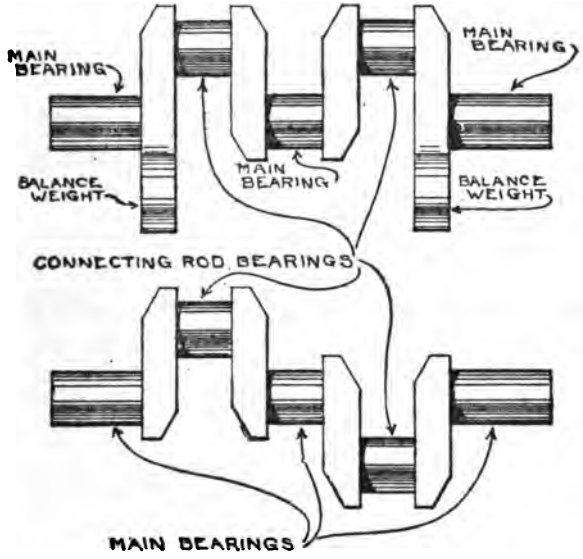

FIG. 7.—2-CYLINDER CRANK SHAFT

The other shaft shown in Figure 7 does not need balance weights, for one crank balances the other. A four-cylinder crank shaft, Figure 8, is also in balance.

Crank shafts revolve in *main bearings*,

which are set in the engine base. In tractor engines these are usually *plain bearings*, a

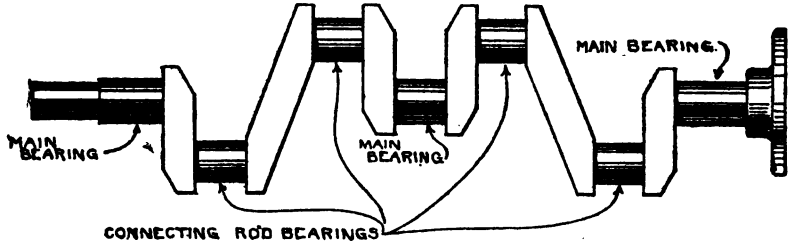

FIG. 8.—4-CYLINDER CRANK SHAFT

half of such a bearing being shown in Figure 9. This is a bronze shell lined with a softer metal, making an exact fit on the shaft;

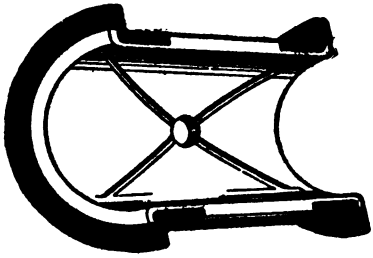

FIG. 9.—HALF OF A PLAIN BEARING

with the two halves in place, the shaft should turn freely, but without looseness or side

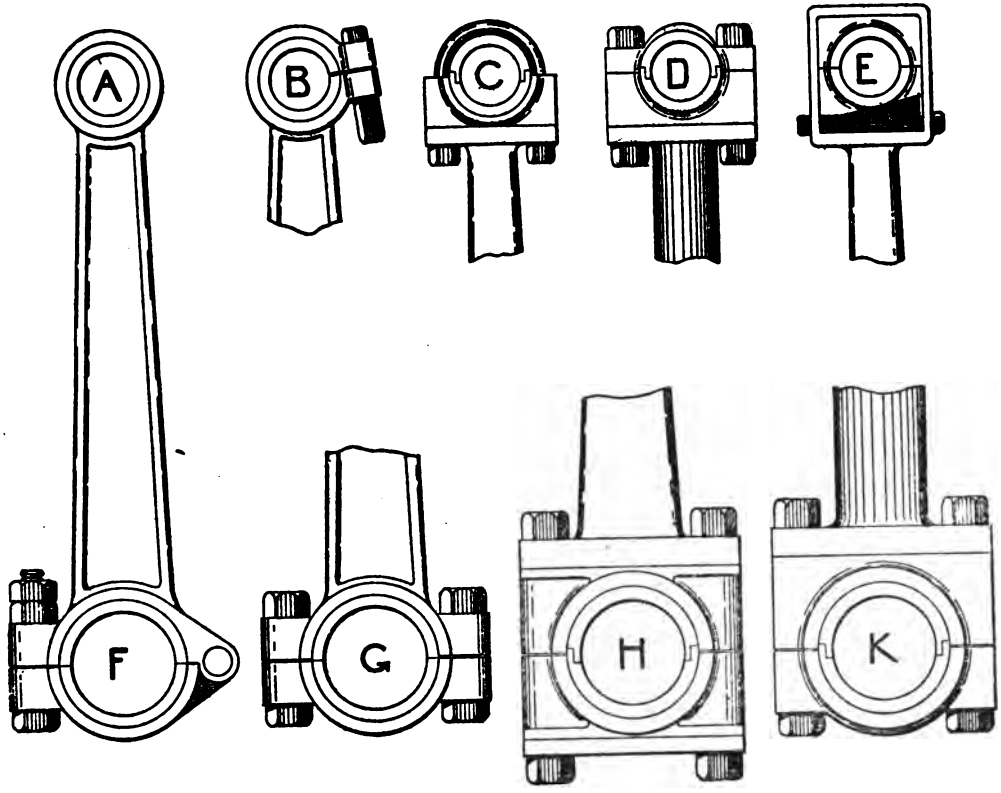

FIG. 10.—CONNECTING ROD BEARINGS

play. The grooves shown are to admit lubricating oil.

The *piston* is attached to the crank shaft by a *connecting rod,* which is illustrated in Figure 10. Pistons are shown in Figures 11

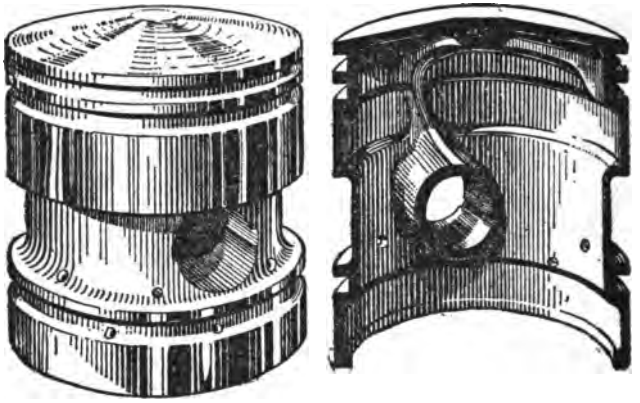

FIG. 11.—PISTON COMPLETE AND IN SECTION

and 12; they are made as light as is consistent with the pressure that they must bear, and are hollow, and open at the lower end.

The piston is attached to the connecting rod by a *wrist pin,* or *piston pin,* which is a shaft passing through it from side to side, and also through the bearing in the upper end

of the connecting rod. The connecting rod swings on the wrist pin in following the rotation of the crank shaft, and its attachment to the wrist pin must permit this without being loose.

The bearings at the two ends of a connecting rod are usually adjustable, so that wear can be taken up; some of the methods of doing this are illustrated in Figure 10. In A, the wrist pin bearing is a plain tube, ground to an exact fit; when it is worn it must be replaced. In B, the bearing is split, and the ends are drawn together by a bolt to the correct fit. The bearing in C is in two parts, held together by a U-shaped bolt, while in D the two parts are held together by a cap bolted to the end of the connecting rod. In E, the end of the connecting rod is a square loop enclosing the two parts of the bearing; the parts are held in the proper position by a wedge adjusted by screws.

The crank shaft bearing of the connecting rod shown in F is in two parts which are

hinged together. G, H, and K show the forms usually used in tractor engines, which consist of two parts bolted together.

The wrist pin is usually firmly attached to

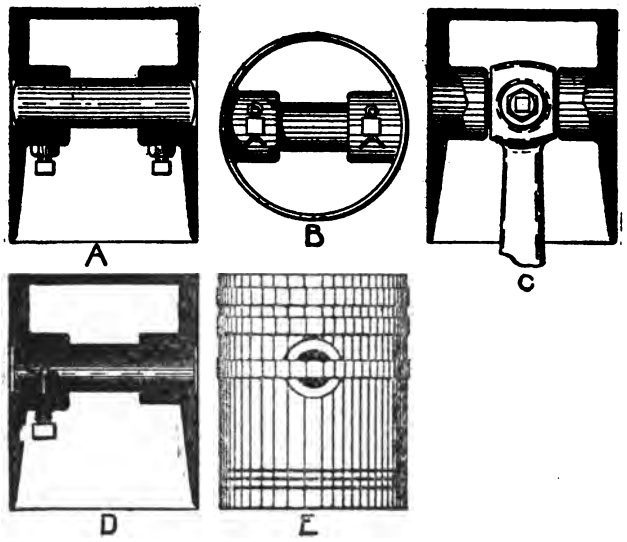

FIG. 12.—WRIST PIN FASTENINGS

the piston, so that the connecting rod swings on it; methods of securing the wrist pin are shown in Figure 12, the wrist pin being held in supports cast in the piston. In A, the

wrist pin is held by two set screws, and in B, by pins passing through it. The wrist pin shown in D is hollow, as is very common, and a bolt passes through part of the piston and into the wrist pin.

In the construction shown in C the wrist pin is secured to the connecting rod and moves in bearings in the piston. In E, a ring fitting in a groove around the piston prevents the wrist pin from moving endways.

The engine must usually be taken to pieces in order to get at the wrist pin; lock nuts, lock washers or cotter pins are always used to prevent the trouble that would be caused if the wrist pin worked loose.

A leak-proof joint between the piston and the cylinder is made by means of *piston rings* that fit in grooves around the piston, as shown in E, Figure 12. Piston ring grooves are shown in Figure 11. Piston rings are not solid, but are split so that they are elastic; they fit snugly in their grooves, and tend to spring open to a greater size than the cyl-

inder. This causes them to maintain a close fit against the cylinder, and the gases are prevented from leaking past.

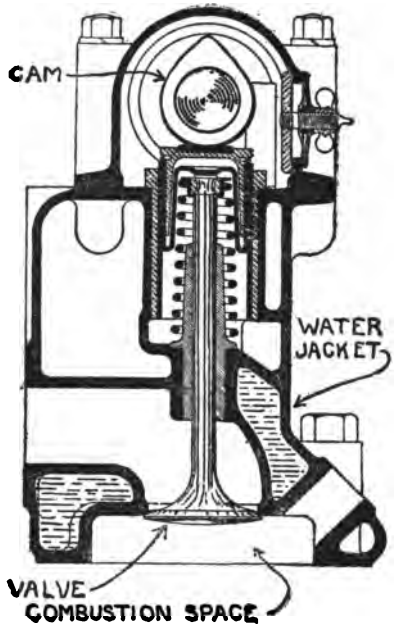

FIG. 13.—VALVE

Each cylinder is provided with two valves: the *inlet valve* that admits fresh mixture and the *exhaust valve* through which the burned

gases escape. These valves are metal disks with funnel-shaped edges fitting into funnel holes. A valve and its stem are shown in Figure 13 and also in Figure 15.

A valve is opened at the proper time by a *cam,* and closed by a spring. A cam is a wheel with a bulge on one side, so that its

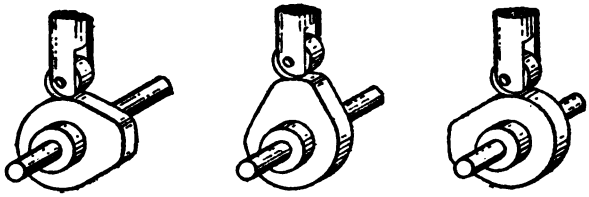

FIG. 14.—ACTION OF A CAM

rim is eccentric to its shaft, as illustrated in Figure 14, which shows a cam in three positions of a revolution. A rod resting on the rim of the cam is moved endways as the bulge passes under it, and the valve is operated by connecting it with the rod.

A valve is opened once during two revolutions of the crank shaft; therefore the cam cannot be placed on the crank shaft, for, if

it were, the valve would be opened every revolution. The cam is placed on a separate shaft which is driven by the crank shaft at half its speed. This is usually done with gears, a gear on the crank shaft meshing with a gear on the cam shaft having twice as many teeth; the crank shaft gear must make two revolutions in turning the cam shaft gear once.

The valve in Figure 13 is held on its seat by a spring. The cam bears against the end of the valve stem, and as it revolves its bulge forces the valve stem and valve to move endways and thus to uncover the valve opening.

As the movement of the piston depends on the crank shaft, the valve can be made to open at the right time by a proper setting of the gears that drive the cam shaft.

The length of time that the cam will hold the valve open depends on the shape of the bulge of the cam. It can be seen that the pointed cam of Figure 13 will not hold the

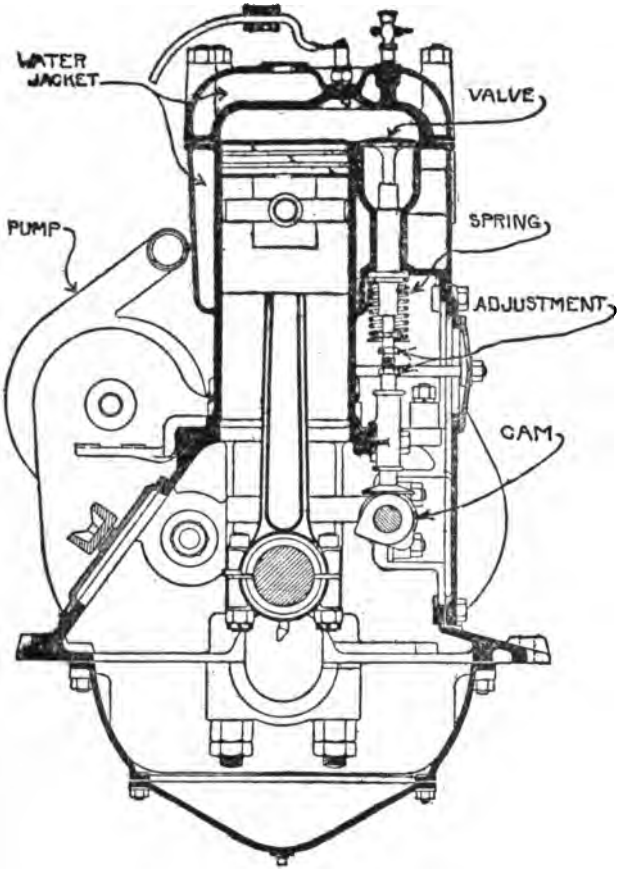

FIG. 15.—"TWIN CITY" TRACTOR ENGINE

valve open for as long a time as the flat-end cam of Figure 14.

In the design shown in Figure 13 the cam bears directly against the end of the valve stem, the cam shaft in this case lying along the cylinder head. In the construction shown in Figure 15 the valves are not placed in the cylinder head, but are in an extension or *valve pocket* projecting from the combustion chamber; this cam shaft is near the crank shaft. It would not be practicable to make the valve stem long enough to reach down to the cam, so a length of rod, called a *push rod,* or *tappet,* is placed between them; the cam moves the push rod and the push rod in turn moves the valve. This is a construction frequently used for automobile engines.

In tractor engines the cam shaft is usually placed near the crank shaft, as in Figure 15, and the valves are in the head, so that a valve moves in the opposite direction to the movement of the push rod. This requires still another part to be used, call the *rocker arm.* It

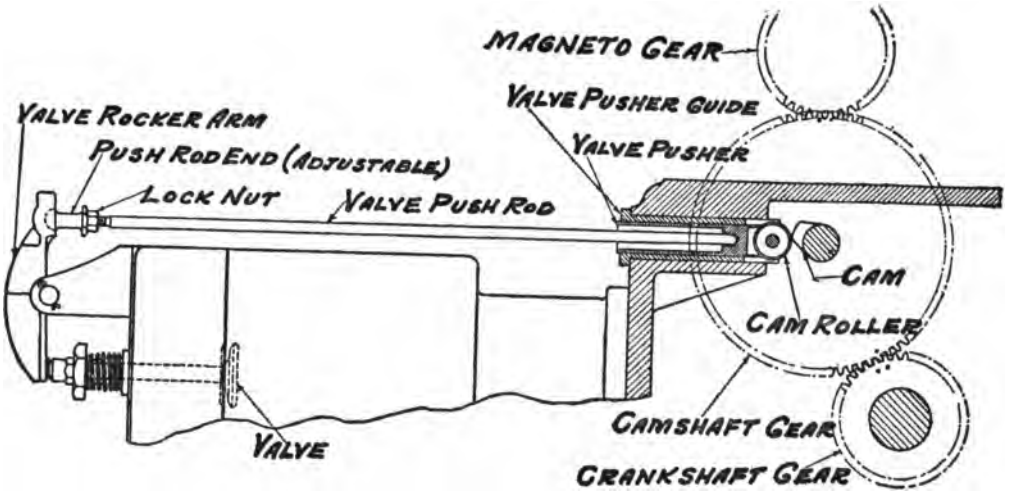

FIG. 16.—"HART-PARR" VALVE MECHANISM

is shown in Figure 16. It is a short bar, pivoted at or near the center, with one end at the push rod and the other at the valve stem. When it is moved by the push rod it in turn moves the valve.

Valves operated by push rods and rocker arms are also shown in Figures 17, 18 and 19; Figure 18 is a single-cylinder horizontal engine, while Figure 19 is a horizontal double opposed engine, in which one cam operates a valve in each cylinder. Figure 20 shows the valve mechanism of a vertical engine in which all parts, including the rocker arm, are enclosed to protect them from dust, and so they can run in oil.

A small space is always left somewhere between the cam and the valve stem, to give the valve stem room to lengthen, which it will do when it gets hot. If this space were not left, the valve stem, in lengthening as it became hot, would strike the part next to it, and the valve would be lifted from its seat. This would cause the engine to lose power.

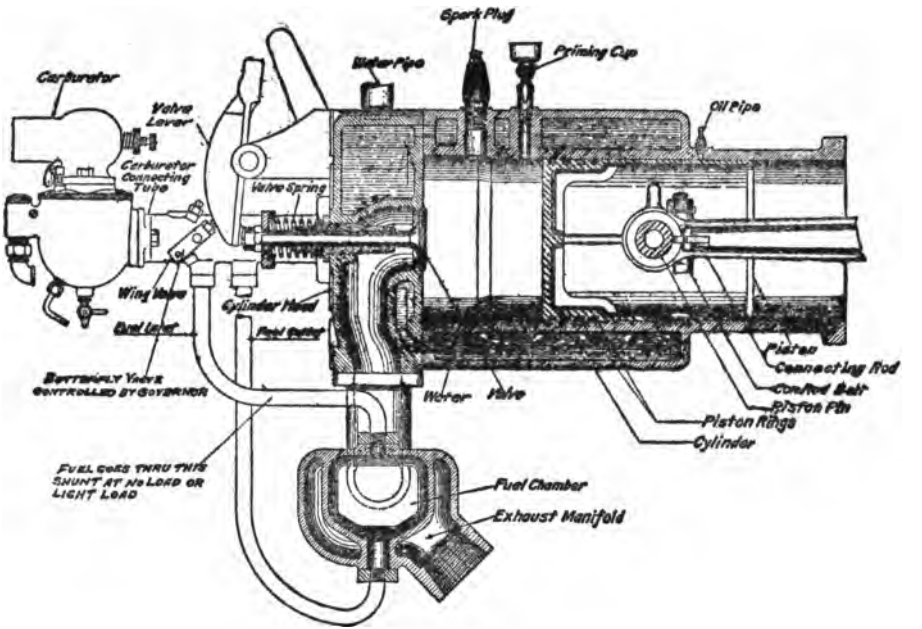

FIG. 17.—"HART-PARR" ENGINE

This space must be kept properly adjusted, and instructions for this will be found in Chapter XII.

A valve is held against its seat by a spring, which must be compressed when the valve is opened. If this spring is too weak, it will not hold the valve tightly on its seat, while if it is too stiff, the cam shaft and other parts will be needlessly strained in compressing it.

Friction between the cam and the end of the valve stem or push rod would cause rapid wear if these parts were not of hardened steel, and kept well oiled. Still further to reduce wear, there is usually a roller on the end of the push rod, as shown in Figure 16 and some of the other illustrations. Figure 15 shows a construction in which the end of the push rod is a flat disk, which rotates as the cam comes into contact with it.

When the mixture burns, the top of the piston, the cylinder head, and the walls of the combustion chamber become heated, and if it is not prevented they will get so hot that

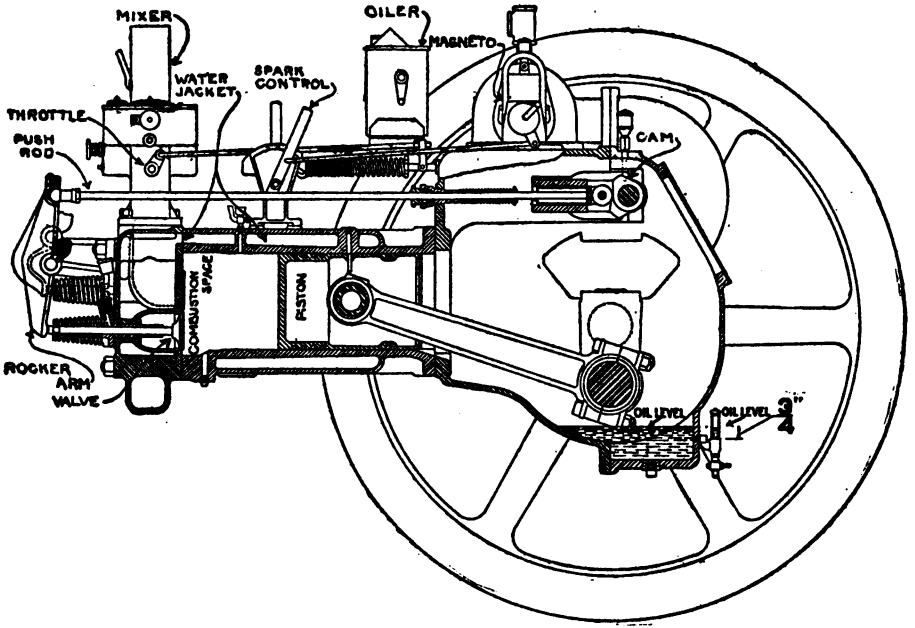

FIG. 18.—"OIL-PULL" ENGINE

they will expand sufficiently to cause the piston to stick, or *seize.* The upper part of the cylinder is, therefore, provided with a cooling system that keeps these parts from getting overheated. Channels are provided through which water is circulated; the water takes the heat from the metal parts, becoming heated itself, and then passes to a *cooler,* or *radiator,* where it gives up the heat to currents of air.

In addition to the channels, or *water jackets,* around the cylinder, a cooling system includes the radiator, the connections, and usually a pump that keeps the water in motion.

In some tractors, notably the Fordson, no pump is used; the water circulates because it is heated. This is called a *thermo-syphon* system. When the engine runs, the water in the cylinder jackets becomes heated; as hot water is lighter than cold water, it rises and flows out of the jackets to the radiator, its place being taken by cool water from the bot-

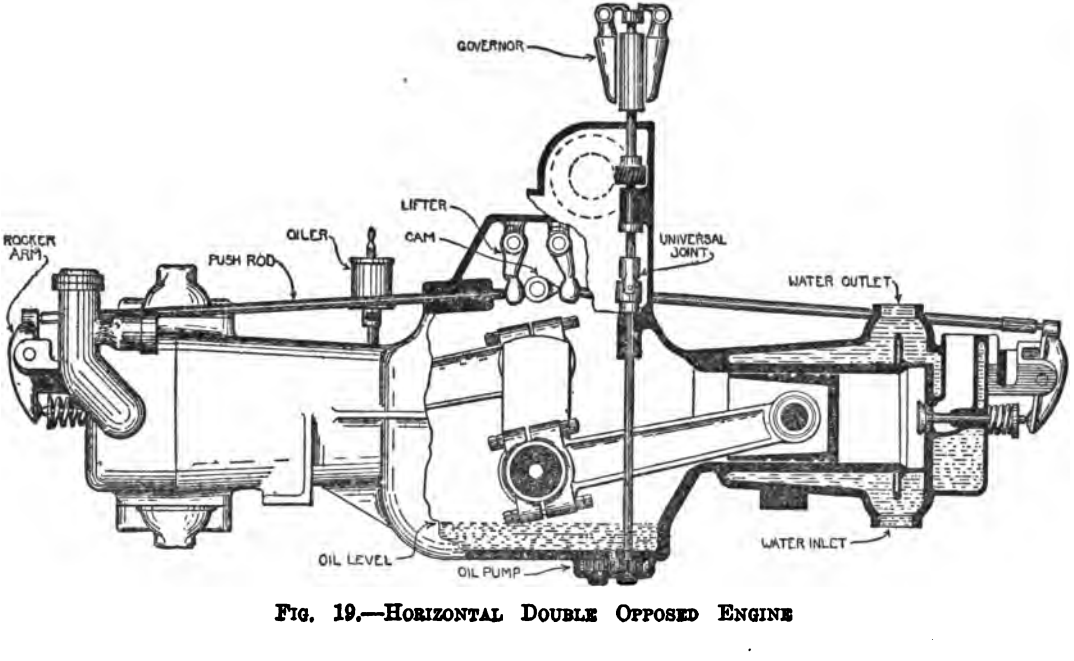

FIG. 19.—HORIZONTAL DOUBLE OPPOSED ENGINE

tom of the radiator. This circulation continues as long as the water in one part of the system is hotter than the water in some other part of the system.

The lubrication of an engine is described and explained in Chapter X.

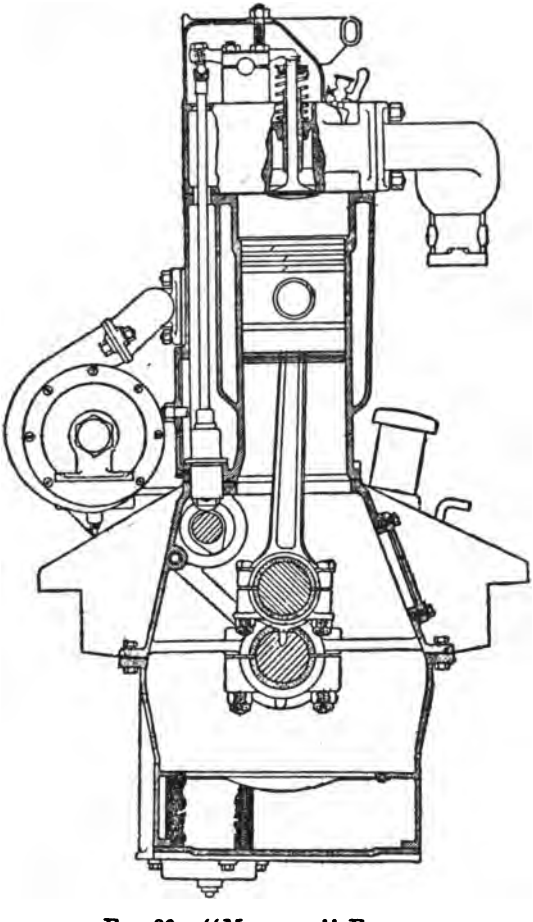

FIG. 20.—"MONARCH" ENGINE

CHAPTER IV

FUELS AND CARBURETION

In order that a thing may burn, it must be provided with oxygen. Oxygen is found in air, so it is usual to say that air is necessary in order that anything may burn.

To prove this, light a candle and place an empty bottle over it, upside down; in a very short time the oxygen in the bottle will be used up, and the flame will flicker and get smoky, and finally die out. If a card is laid on the chimney of a coal-oil lamp so that it covers the opening, that flame also will flicker, get smoky and go out.

In order to deaden the fire in a stove, the dampers are closed to prevent air from entering; the fire is kept alight by the very small quantity of air that leaks in below the fire-box. When the drafts are opened the fire will

burn up brightly because a plentiful volume of air can then enter.

In a similar way, air must be used in a gas engine in order that the fuel may burn. It is not possible to mix air with a liquid; the first step in making a gas that will burn is, therefore, to turn the fuel, whether it is gasoline, kerosene, distillate, or other oil, into a vapor; this vapor is then mixed with air.

For good results it is very necessary that the vapor and air be in proper proportions. In the experiment with the candle and the bottle it was seen that as the air was used up, the candle flame became yellow and smoky: this is the effect of insufficient air. If there is not enough air in the mixture, part of the vapor will not be able to burn, and will only smoke.

If, on the other hand, there is too much air, the mixture, if it will burn at all, will burn slowly, and the extra volume of air will reduce the heat.

In a mixture of the proper proportions of air and fuel vapor, the burning, or *combustion,* will be very rapid, resulting in the sudden production of the greatest possible amount of heat. This, of course, is what is necessary if the engine is to produce its fullest power. With such a mixture, combustion will be complete before the piston has done more than start outward on the power stroke, and the greatest possible, or *maximum,* pressure will then be produced.

When a mixture burns slowly, the piston will have gone through much of the power stroke before combustion is complete, in which case a considerable part of the pressure that should have been applied at the beginning of the stroke will be wasted.

A mixture that is not correct will burn unevenly; it may burn better during one power stroke than during another, which will make the engine run unsteadily.

If the mixture has too much air in proportion to the amount of vapor, it is known

as a *thin* mixture, or a *lean* or *poor* mixture. It burns so slowly that it is quite possible for the mixture that started burning before the beginning of the power stroke to continue burning through the exhaust stroke, and for enough flame to remain in the cylinder to set fire to the fresh charge that enters during the next inlet stroke. This will produce what is known as a *backfire;* that is, the mixture entering the cylinder will catch fire, and in burning will blow back through the open inlet valve. This is a dangerous condition, for the flame might spread to fuel dripping from the carburetor, or to the fuel tank.

A mixture that has not enough air is called a *rich* mixture; the air that is present will burn part of the vapor, while the rest will go out of the exhaust unburned, or will work past the piston into the oil in the crank case. This is wasteful of fuel.

The most serious result of a rich mixture, however, is in the production of *carbon,* and the *carbonization* of the engine. The flame of

a rich mixture is smoky; the smoke of this flame, as is the case with smoke from all other sources, is composed of fine particles of carbon, or soot. These particles of carbon will deposit on all parts of the combustion space: on the top of the piston, on the valves, on the spark plugs, and on the inner wall of the cylinder head. At first it is gummy, but it rapidly hardens and forms a crust that must be scraped off with a steel tool.

Carbon in an engine will reduce the power through causing *preignition,* or, in other words, by setting fire to the fresh charge before the proper point in the stroke. The heat of the combustion will cause the carbon deposit to become so heated that it will glow, these glowing particles being sufficient to ignite the incoming fresh charge. The remedy for this condition is to remove the carbon, which is usually done by taking off the cylinder head and scraping away the deposit.

It may be added that carbon is also formed

by the use of too much lubricating oil, as will be explained in the chapter on lubrication.

Thus it is seen that if the engine is to run properly, and is to be kept in good condition, the proportions of the mixture must be very carefully maintained.

The mixture is formed in a *carburetor,* or *mixer.* This is, roughly, in the form of a tube through which air is sucked during the inlet stroke; projecting into it is a fine tube called a *spray nozzle* through which the fuel enters. In action it is somewhat similar to the atomizer that is used for spraying the nose and throat. By forcing the fuel to flow rapidly through this small tube it comes out in the form of spray, and the tiny drops are picked up by the current of air and are carried into the cylinder.

It is much easier to form a mixture of gasoline than of kerosene or distillate, because gasoline vaporizes more readily at ordinary temperatures. If saucers of gaso-

line and kerosene are placed in the sun, the gasoline will evaporate rapidly and completely, leaving only a faint oily deposit. The kerosene, on the other hand, will evaporate slowly, and much of it will not evaporate at all.

To make kerosene and distillate evaporate completely, they must be heated, just as water must be heated to make it evaporate.

In the case of a carburetor for gasoline, the current of air needs only to be warmed; the spray of gasoline will evaporate on coming into contact with the warmed air, and much of it will enter the cylinder as vapor. In order to evaporate kerosene and distillate much more heat must be provided, and it is usually considered necessary to heat not only the current of air, but the liquid fuel as well. Methods of doing this will be explained in the next chapter.

When kerosene or distillate is used, there are conditions that make it necessary to add water vapor to the mixture, which prevents

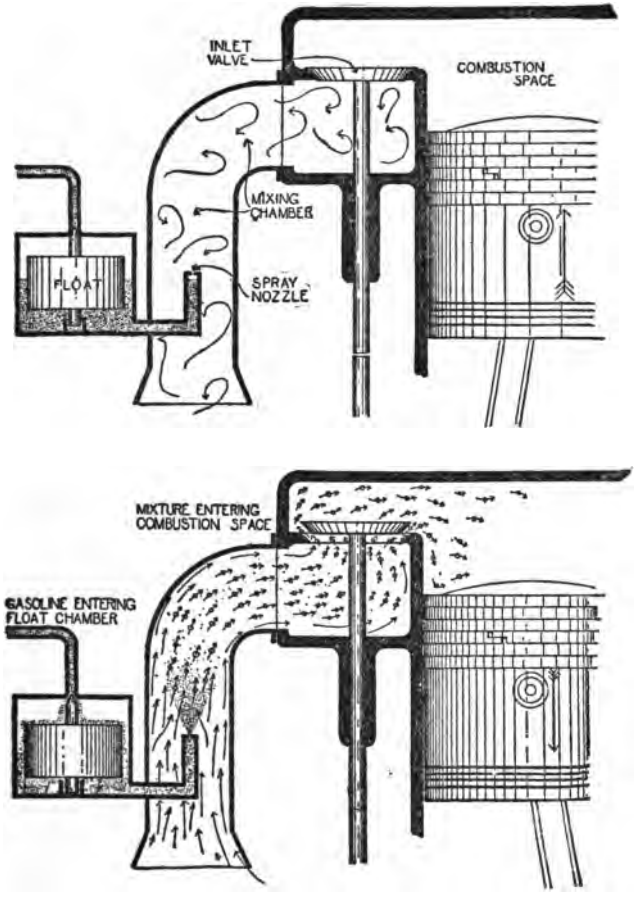

FIG. 21.—PRINCIPLE OF CARBURETOR

the overheating of the cylinder and reduces the deposit of carbon. The difficulty of making a complete vapor of kerosene and distillate results in a tendency on the part of these fuels to carbonize the cylinders; the use of water aids in keeping the cylinders clean.

The general principle of a carburetor is shown in Figure 21, one drawing illustrating conditions when the inlet valve is closed and the other when it is open. It shows an engine cylinder connected with an inlet pipe or *mixing chamber,* through which there is a swift flow of air during an inlet stroke.

Projecting into the intake pipe is the *spray nozzle,* which is connected with a small chamber containing fuel; inside of this chamber is a *float,* usually made of cork, although it is sometimes a light metal box. The fuel is intended to fill the chamber to a certain height, at which the valve will be closed by the float rising on the fuel. This level is such that the fuel does not quite reach the tip of the spray nozzle.

During the compression, power, and exhaust strokes, the fuel stands at this level, for it cannot run out of the spray nozzle, and the float holds the valve closed. As soon as the inlet valve opens, air rushes through the intake pipe and sucks fuel out of the spray nozzle. This, of course, takes fuel out of the float chamber; the float in sinking opens the valve, and enough fuel enters to restore the level.

The fuel comes out of the nozzle in the form of fine spray; it is in such small drops that it evaporates quickly, and the resulting mixture of fuel vapor and air passes into the cylinder. By using a spray nozzle of the proper size, any desired proportion of fuel and air may be obtained.

If an engine runs at a single speed, a carburetor as simple as this one would be satisfactory, for if the suction is always the same, there will be little or no change in the proportions of the mixture that is formed.

To get the best results, the proportions of

fuel vapor and air should be the same for all running speeds of the engine. The proportions of the mixture, however, depend on the violence of the suction, which changes as the engine speed changes, becoming greater as the speed increases. The simple carburetor illustrated in Figure 21 can be adjusted to give a correct mixture for any particular speed, but will be out of adjustment for any other speed.

The speed of a 1-cylinder engine does not change very greatly; it is built to run at practically a constant speed, and a simple carburetor is satisfactory for it. The speed of engines with a greater number of cylinders may be greatly changed, and the carburetor must be so made that it will give the same proportions of vapor and air at low speed as at high.

In the simple carburetor described, the speeding-up of the engine will result in a greater rush of air through the intake pipe, which in turn will suck out a much greater

quantity of fuel. If the carburetor is adjusted to give the proper quantity of fuel for the air that passes at low speed, at high speed it will give far more fuel than will be required by the quantity of air that then passes. Thus at high speed the mixture will be too rich.

If, on the other hand, this carburetor is adjusted to give a proper mixture at high speed, too little fuel will be sucked out when the engine runs slowly, and the mixture will be too lean.

A carburetor must thus have an additional device that will keep the mixture correct, regardless of the speed at which the engine runs. This is sometimes done by changing the size of the spray nozzle so that a greater or less quantity of fuel flows out, but more usually by permitting an extra quantity of air to enter the carburetor as the engine speeds up. This is done with an *extra air intake,* the principle of which is illustrated in Figure 22.

As will be seen, this carburetor has two openings for air, one being the main air inlet and the other the extra air inlet. The latter is an opening provided with a valve which is held on its seat by a spring. The

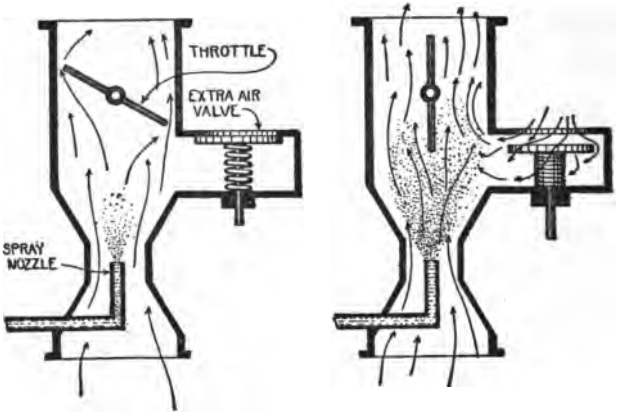

FIG. 22.—PRINCIPLE OF EXTRA AIR INLET

suction created by an inlet stroke is exerted in the carburetor, but at low speed is not sufficient to suck the extra air valve from its seat. Air then enters only through the main air inlet, and the spray nozzle is adjusted to give the proper proportion of fuel.

As the engine speed increases the mixture

becomes richer; but there is also an increase in suction, which becomes strong enough to pull the extra air valve from its seat. This provides another opening into the carburetor, through which enough air enters to keep the mixture in proper proportion. The higher the speed of the engine the more the valve will open, and the greater will be the quantity of air admitted.

In order to get the fullest power from an engine, the carburetor is built to give its most perfect mixture at the usual working speed. This will be the speed at which the engine will run under ordinary conditions. As the engine will run at this speed most of the time, the carburetor should then deliver its best mixture on the least possible quantity of fuel.

As an engine is run at low speed so little of the time, it is not necessary that the mixture should then be so perfect or that the fuel should be used so economically.

The design of a carburetor is a complicated matter, because the production of mixture is

due to the flow of air, which is a very changeable thing. On a cold, damp day, the air will be heavier and denser than on a day that is hot and dry, and different quantities of fuel will be necessary for the formation of the mixture. The carburetor manufacturer cannot make a commercial carburetor that will take care of such a difference as this; he strikes an average that gives good general results, and expects the user to change the adjustments when weather and temperature make it necessary.

The formation of the mixture is affected by the condition of the engine. When all of the parts of the engine are tight, the suction in the carburetor is more violent than when there is a leakage of air past the piston rings, or through a leaky valve or spark plug.

On a dry, hot day the fuel evaporates much more readily than on a day that is cold and damp; more of the fuel that flows out of the spray nozzle will be vaporized and the formation of the mixture will be easier. On

a cold, damp day the fuel will not vaporize in the carburetor to any extent, and much of it will pass to the cylinder in drops that even there will not vaporize in time to form a mixture. In order to assure the vaporization of enough fuel to form a mixture under such conditions, the fuel and the air must be heated to a greater degree.

As the engine becomes heated up, more and more of the fuel will vaporize, and the amount flowing out of the spray nozzle may therefore be cut down.

With fuels like kerosene and distillate, which do not vaporize as readily as gasoline, it is not unusual to have them condense on the walls of the inlet pipe, which produces a condition known as *loading*. This condensation is similar to the sweating of an ice-water pitcher on a hot day. If an engine is running at a constant speed, loading does not make much difference, because the carburetor is so adjusted that it gives a proper mixture. If the engine is suddenly speeded up, how-

ever, the greater rush of air will pick up the condensed fuel, and the mixture will instantly become too rich, continuing so until this extra supply of fuel is used up. The result will be to choke the engine and make it lose power just at the time when extra power is needed.

Loading can be prevented by heating the inlet pipe to such an extent that the fuel will not condense on it.

The speed of a tractor engine is practically always controlled by a *throttle,* which is a valve set in the passage of the carburetor. It operates exactly the same as a damper in a stovepipe; when it is closed, it shuts the passage and prevents the flow of mixture to the engine. As it is opened, it permits a greater quantity of mixture to flow, and it follows, of course, that as the charges of mixture become larger, the engine runs with more power. A tractor carburetor usually has two throttles, one being operated by hand and the other by the governor.

It is usual for a carburetor to be fitted with a *strangler,* or *choke,* which makes it easier to form a mixture at slow starting speed. When an engine is cold, the fuel evaporates slowly; and, furthermore, when an engine is cranked by hand its speed is so low that the suction in the carburetor is not sufficient to draw out enough fuel to form a mixture. The strangler is a valve similar in every way to the throttle, but placed between the main air inlet and the spray nozzle. When it is closed and the engine is cranked, very little air can enter the carburetor; the suction is therefore very great. Far more fuel than usual is then sucked out of the spray nozzle, and of this greater amount enough reaches the cylinder to form a combustible mixture. The engine will start, but as soon as it does so, the strangler must be opened so that the normal amount of air enters. If this is not done, the excessive suction will draw so much fuel out of the spray nozzle that the mixture formed will be too rich to burn.

CHAPTER V

CARBURETORS

THE apparatus that forms the mixture is in two parts, one being the carburetor that proportions the fuel to the quantity of air drawn into the cylinder, and the other the *mixing chamber,* or *manifold,* that connects the carburetor with the valve chamber. The mixing chamber has no adjustments; it is a passage, often a pipe, that is shaped to fit the conditions, and according to the ideas of the manufacturer. When kerosene and distillate are used, the mixing chamber must be heated, so it is frequently built into the *exhaust manifold,* which is the pipe that conducts the burned gases away from the engine. In some cases it gets heat from the water jacket of the engine, a water jacket formed around it being connected with the cooling system.

The carburetor, on the other hand, has adjustments that must be understood in order to run the engine economically. The understanding of these adjustments is simplified if it is remembered that the object of the carburetor is to maintain a correct proportion of fuel to the volume of air that passes through it.

All tractor carburetors operate on the same principles, and the principles are applied in much the same way. If these principles are understood, and there is an understanding of what the parts of a carburetor are for and what they do, there should be no difficulty in adjusting and caring for any kind of a carburetor that may be offered.

The main body of the carburetor is the tube through which the air passes. This is a casting, and cannot be adjusted or altered. Into this passage projects the spray nozzle, which is usually provided with an adjustment to control the amount of liquid that may flow out of it. When no adjustment is provided,

the spray nozzle is made removable, so that a nozzle with an opening of any desired size may be inserted.

On some carburetors the extra air valve is

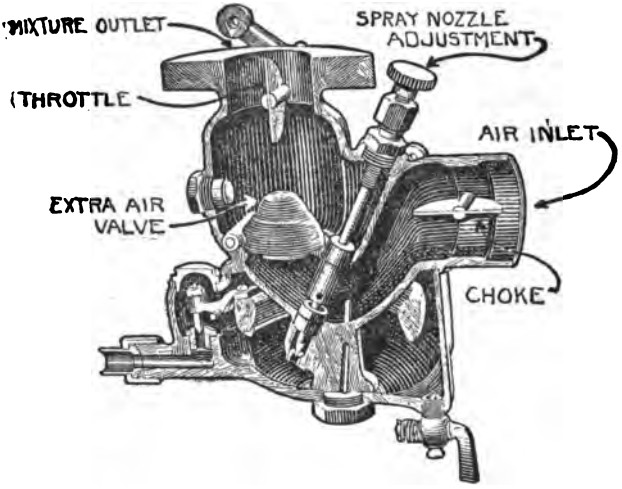

FIG. 23.—"KINGSTON" CARBURETOR, MODEL L

set by the manufacturers, while on others it is adjustable by controlling the strength of the spring that holds it against its seat.

The carburetor shown in Figure 23 has a spray nozzle adjustment of a very usual type. A rod is so arranged that its pointed end

projects into the opening of the spray nozzle; by screwing it up or down the opening may be made larger or smaller, so that more or less fuel may flow out. The extra air valve is a flap valve that closes the air passage until the suction is great enough to lift it from its seat. Around the spray nozzle is a tube that connects the passage below the extra air valve with the passage above it; when the suction is too low to lift the extra air valve from its seat, any air flowing through the carburetor passes through this tube. The tube is so small that even a little air passing through it is enough to suck fuel out of the spray nozzle, and the spray nozzle is so adjusted that enough fuel comes out to make a proper mixture with that volume of air.

This is the *low-speed adjustment,* which gives a mixture on which the engine will start and will run at its lowest or *idling* speed. At this speed the engine produces just enough power to keep itself going.

When the engine speeds up, and suction

increases, the extra air valve is lifted off its seat, and a greater volume of air flows through the carburetor. The increased suction also draws more fuel out of the spray nozzle. If the greater amount of fuel were in proportion to the greater volume of air, there would be no change in the mixture, but this is not the case. As suction increases, the proportion of fuel drawn out of the spray nozzle becomes too great for the air, and the mixture becomes too rich. To overcome this, the extra air valve permits a still greater volume of air to pass, so that the proportions of fuel and air do not change.

The chamber below the air passage in Figure 22 is the fuel cup, into which fuel flows from the tank. Inside the fuel cup is a ring of cork attached to a pivoted lever, on the other end of which is a needle valve that can close the opening through which the fuel enters the cup. As the cup fills, the cork floats on it, and in rising it moves the lever on its pivot. When the fuel reaches such a

level that it is near the tip of the spray nozzle, the valve closes the opening and prevents more fuel from entering.

In the carburetor shown in Figure 24, the

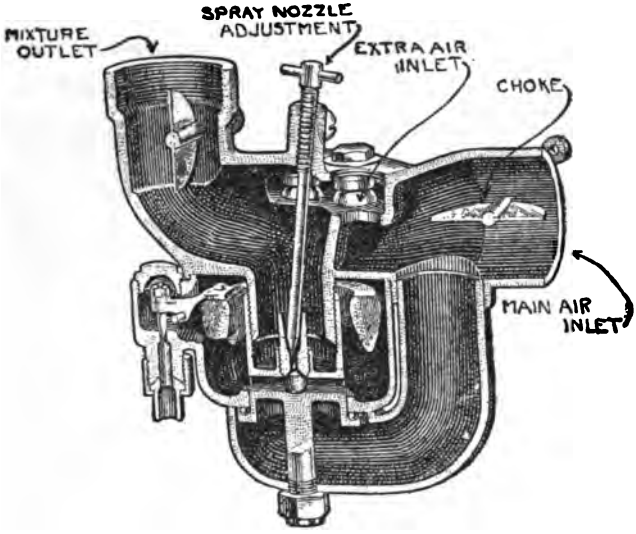

FIG. 24.—"KINGSTON" CARBURETOR, MODEL E

principal air passage is past the spray nozzle, and all air goes by this passage when the engine is running at low speed. The extra air inlet consists of a number of holes through which air can pass without going past the

spray nozzle. On each of these holes is a ball; when the suction is low the balls completely close the holes. When speed increases, the suction becomes great enough to lift the balls off the holes, and the extra volume of air that is necessary is permitted to enter. By making the balls of different weights, it can be seen that the volume of air admitted for any speed is under good control.

Like the carburetor shown in Figure 23, this carburetor is of the *float feed* type; that is, the flow of fuel to it is controlled by a valve that is operated by a float.

Either of these two carburetors may be adjusted for gasoline or for kerosene, but the adjustment that is right for one is wrong for the other. Thus, if an engine is started on gasoline, with the intention of running on kerosene, the carburetor must be readjusted when the change is made. This is unsatisfactory, so a double carburetor is sometimes used, as shown in Figure 25. This consists of two carburetors of the kind shown in Fig-

ure 24, having a single mixture outlet, one being adjusted for gasoline and the other for kerosene. Either of them can be connected

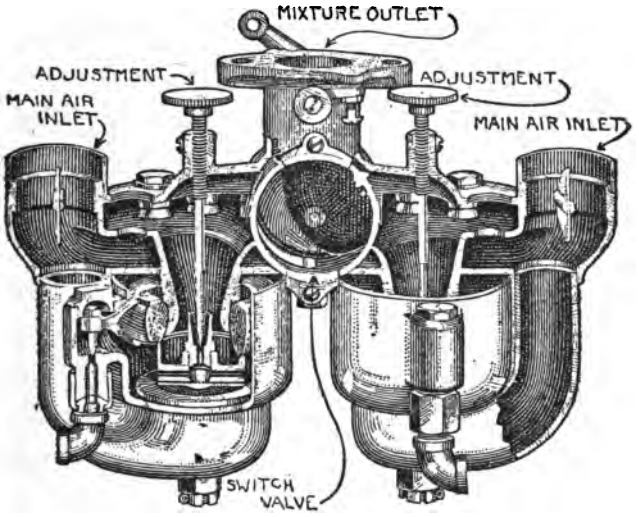

FIG. 25.—"KINGSTON" CARBURETOR, DUAL MODEL

with the mixture outlet by means of a switch valve.

In order to run on kerosene or distillate it is necessary to apply heat for the reason that these oils do not evaporate readily at ordinary temperatures. Gasoline, on the

other hand, evaporates readily, and a cold engine can be started on it. Tractors that run on kerosene or distillate are therefore started on gasoline and run on it until they are hot enough to vaporize the heavier oil.

A carburetor that will run on either gasoline or kerosene is shown in Figure 26. The main air inlet is at E, which leads the air around the spray nozzle and into the chamber G. The mixture flows to the cylinder by the passage B. The control of the fuel at working speeds is by the high-speed adjustment, which is a needle valve screwing into the spray nozzle. Above this is another needle valve that adjusts the flow of fuel for slow speed.

Extra air enters through the opening A, which is closed at slow speed by a valve held against it by a spring. This valve bears against one end of a pivoted lever, the other end of which is attached to the slow-speed needle valve; when the extra air valve opens it moves the lever and the slow-speed needle

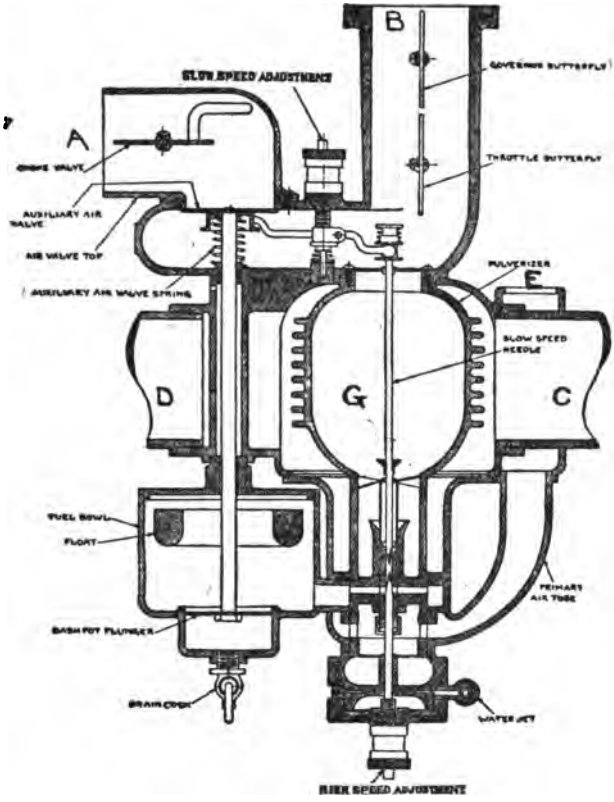

FIG. 26.—"E-B" CARBURETOR

valve is lifted to permit the flow of a greater volume of fuel from the spray nozzle.

This carburetor is started on gasoline. When the engine is hot, a switch valve is operated to permit the burned gases from the engine to flow through the carburetor; they pass through the pipe C, D, and as the chamber G is directly in their path it becomes intensely heated. The carburetor can then be switched to kerosene. A side view of this carburetor is shown in Figure 27.

These carburetors are all of the float feed type, and are used on engines of which the speed is variable. A carburetor that is fed by a pump is shown in Figure 28. This is a simple tube with a fuel cup cast on one side of it. Fuel is pumped to the bowl, and the proper level is maintained by an overflow through which excess fuel passes back to the tank.

This carburetor is intended for an engine of which the speed does not change greatly. Its only adjustment is the spray nozzle, and

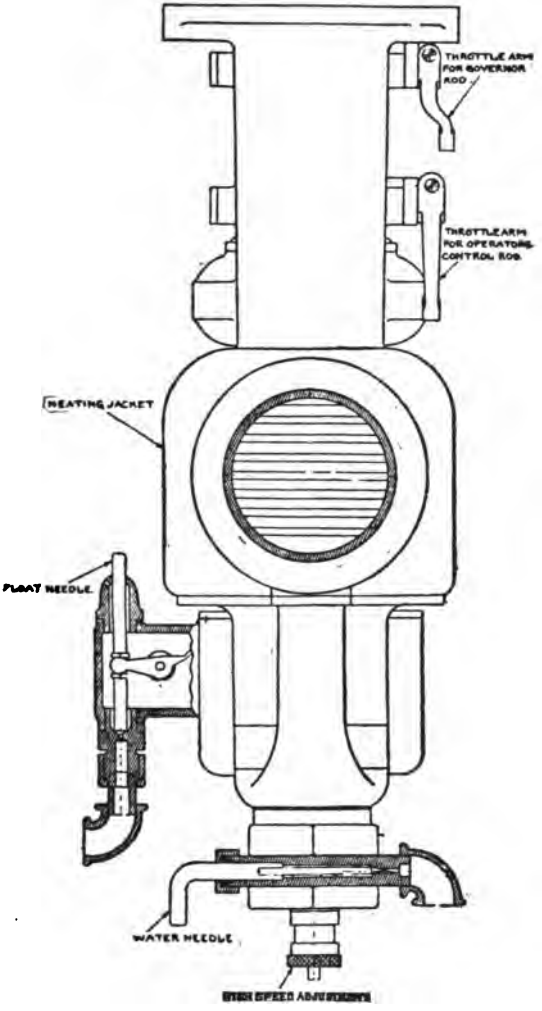

FIG. 27.—"E-B" CARBURETOR, SIDE VIEW

this is altered to correspond with changes in engine speed.

If an engine is clean and in good condition,

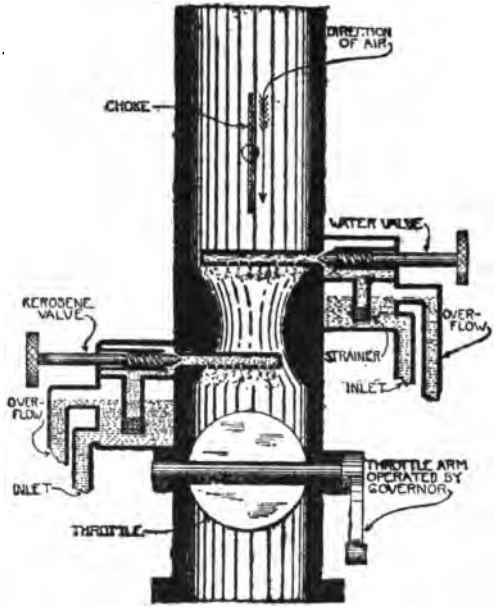

FIG. 28.—PUMP-FED CARBURETOR

it will run as well on kerosene as on gasoline, although the heating effect of kerosene is greater. When an engine is carbonized, as is usually the case, a condition known as

preignition will occur unless it is prevented. Carbon from unburned fuel or from lubricating oil will deposit on the piston head and the parts of the combustion chamber, and particles will become heated to the glowing point, when they will set fire to the fresh mixture during the compression stroke and before the proper time. The effect is to make the engine lose power, and it also gives rise to a sharp metallic knocking. By reducing the temperature in the cylinder during the compression stroke this condition can be prevented. This can be done by adding water vapor to the mixture, and kerosene carburetors are therefore built with a water attachment. As can be seen in Figure 28, this is a water cup and spray nozzle like those for the fuel. When the engine knocks, and shows that preignition is occurring, water is turned on, and, being carried into the cylinder, keeps the mixture from being heated to the point of ignition before the proper time.

Figure 29 shows the attachment of this

carburetor to an engine which, in this case, is horizontal. To start the engine, gasoline is injected into the carburetor, as shown; this

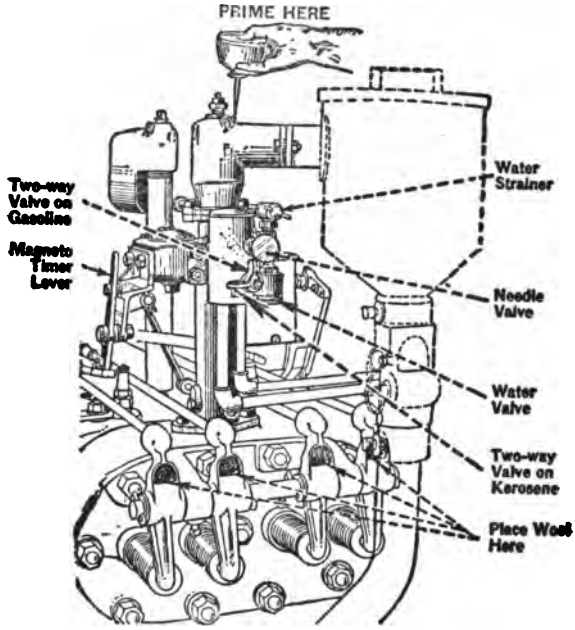

FIG. 29.—"TITAN" CARBURETOR

will give a sufficiently good mixture for the purpose, and enough heat for running on kerosene is thus obtained.

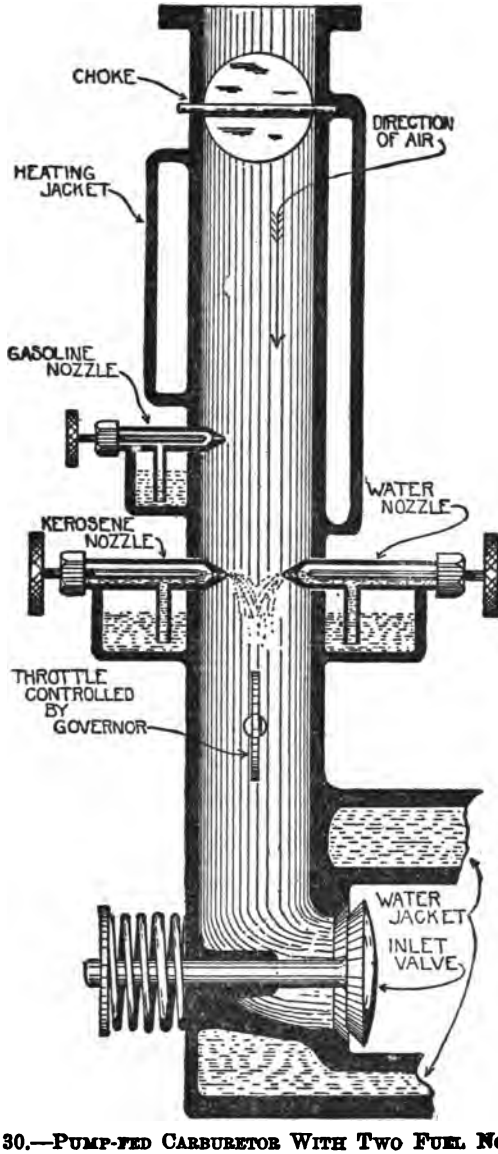

FIG. 30.—PUMP-FED CARBURETOR WITH TWO FUEL NOZZLES

The carburetor shown in Figure 30 is similar, but has a bowl and spray nozzle for gasoline, to use in starting. It is also provided with a heating jacket through which hot water or hot gases may circulate.

In many cases the fuel is heated before reaching the carburetor. This is done by coiling the feed pipe around the exhaust pipe or putting it in a jacket through which hot water circulates.

Another device sends the mixture through a chamber heated by the exhaust, as shown in Figure 31. Figure 32 shows an arrangement in which the mixture passes through a jacket around one branch of the exhaust pipe. By means of a switch valve, A, more or less of the exhaust gases may be permitted to flow through this branch, so that the mixture may be heated to any desired degree.

All of these heating devices are so arranged that the heat is under the control of the driver, which permits him to heat the mixture as much as he judges to be necessary.

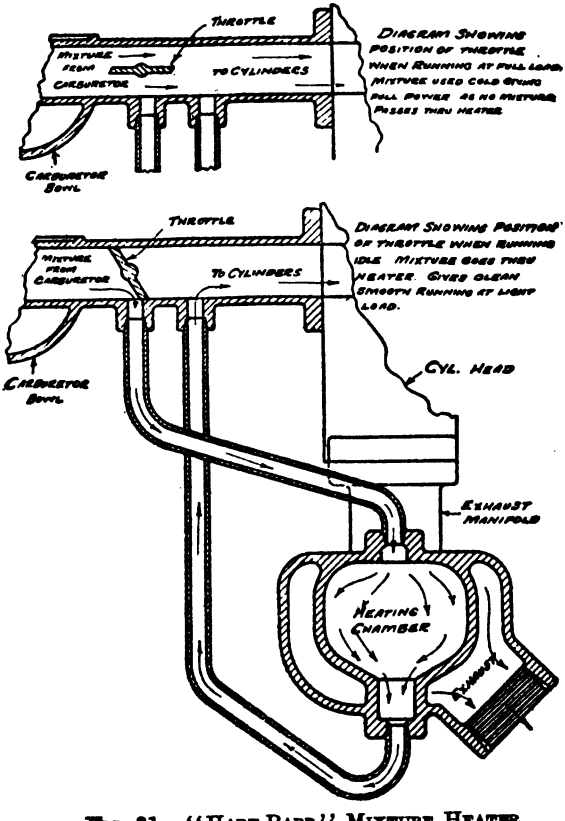

FIG. 31.—"HART-PARR" MIXTURE HEATER

Enough heat must be used to prevent the fuel from condensing; but too much heat will cut down the efficiency of the engine be-

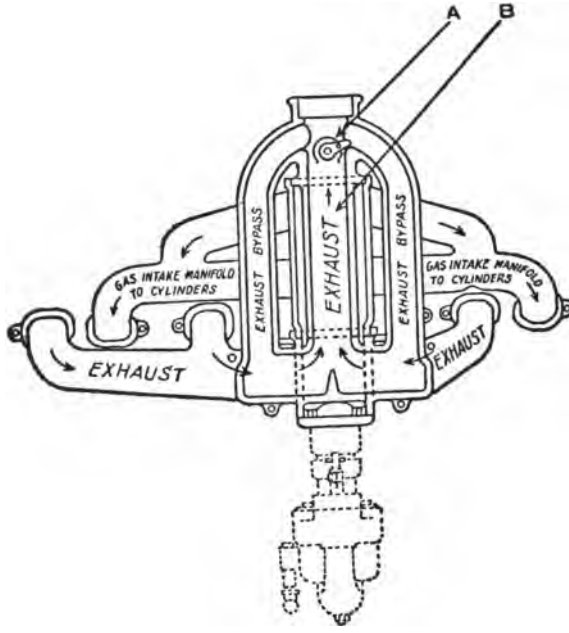

FIG. 32.—"TWIN CITY" MANIFOLD

cause it will cause so much expansion of the mixture that a cylinderful of it will not produce the maximum power.

Figure 33 shows the pump that is used in a force-feed carburetor of the type shown in Figure 28. Its plunger is forced through an inward stroke by a cam, and makes an outward stroke as its spring returns it to position. The inlet and outlet openings of the cylinder are closed by ball check valves, the inlet check being open on the outward strokes, and the outlet check being open on the inward strokes. A pump of this sort requires no attention beyond seeing that the check valves work properly, and that there are no leaks.

Figure 34 shows the connections between the fuel tank and the carburetor. Under the tank, 1, is a chamber containing a fine-wire strainer, 4, through which the fuel must pass to reach the carburetor; any dirt that may be present is strained out, and collects in the cup, 2. Water in the fuel also settles here, and the cup is cleaned out by unscrewing the plug, 3. 5 is the shut-off cock; it

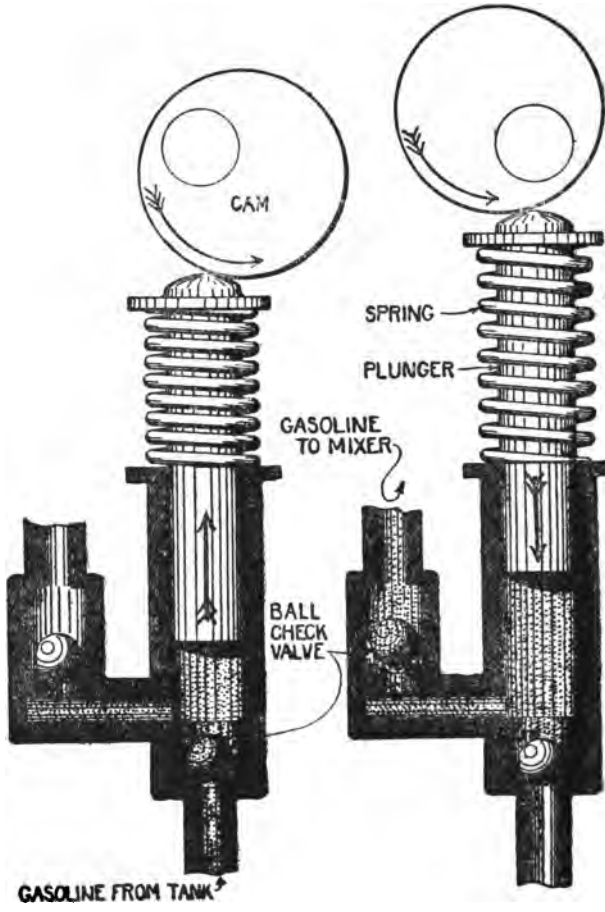

FIG. 33.—FUEL PUMP

should always be closed when the tractor is not working.

A complete fuel system is illustrated in Figure 35, showing the connections of the tanks, pumps, and carburetor.

As dirt is injurious to an engine, the air that forms the mixture must be clean, so when a tractor works in a dusty field, it should be equipped with an air cleaner, of which there are three kinds. In one of these the air is required to pass through water, which washes it. A cleaner of this type is shown in Figure 36. The dusty air enters the central passage, and is forced to pass through the water in order to reach the outlet. Passage through the water and through the baffle plates frees the air of all its dust.

In the cleaner shown in Figure 37, the air is passed through loose wool, which filters out the dust. Another type of cleaner works on the same principle as a cream separator; the air is given a whirling motion, which

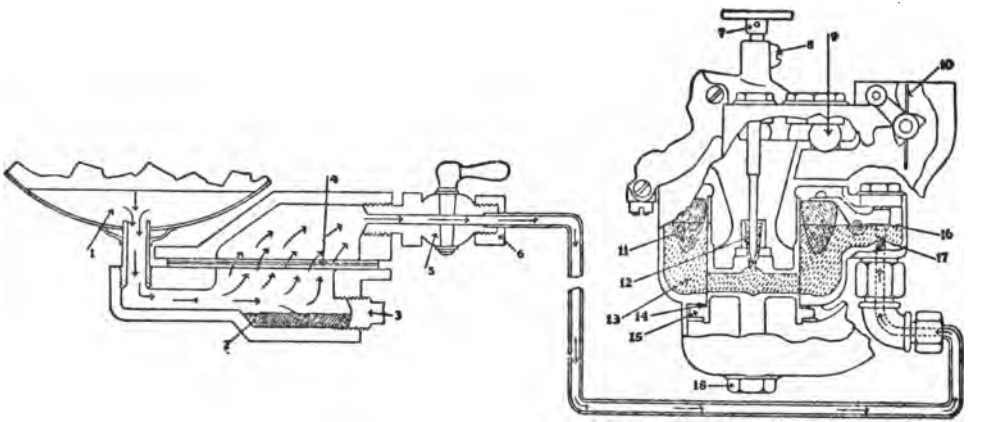

FIG. 34.—"AVERY" FUEL CONNECTIONS

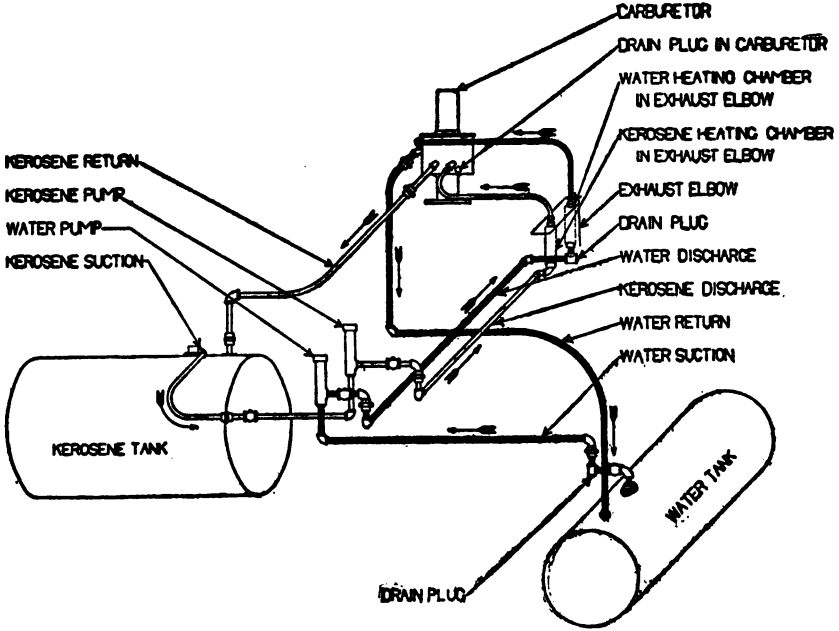

FIG. 35.—"OIL-PULL" FUEL SYSTEM

throws the dirt out at the sides, and it is collected in a glass jar.

These air cleaners must be emptied frequently, for if they are not kept clean it cannot be expected that they will do their work.

A tractor engine is built to develop its maximum power at a certain speed; if it runs at greater speed, it will not operate efficiently, and there will be unnecessary wear of its parts. These engines are therefore usually fitted with *governors* which hold them at their most efficient speed. A governor operates by *centrifugal force.*

Anything in motion tries to move in a straight line; if it is forced to move in a circle, it will exert force in trying to move away from its center. It is this that is called centrifugal force. It is centrifugal force that holds water in a pail that is being swung around the head, and that makes the pail fly off if it is released.

In applying this principle to a governor, weights are attached to a plate and made to

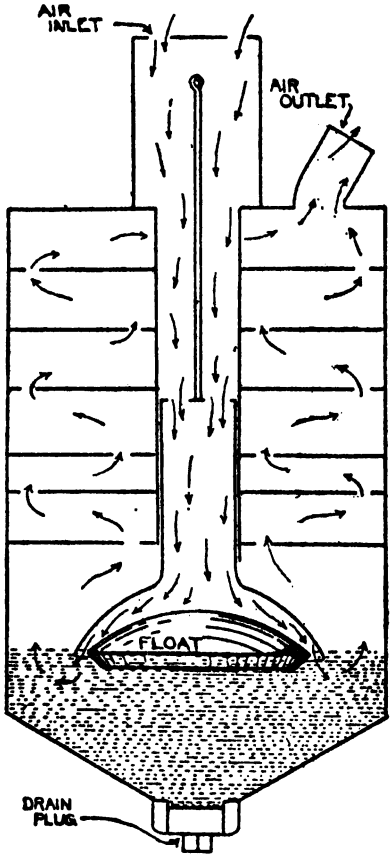

FIG. 36.—AIR WASHER

revolve; springs hold them together, but in spite of this, centrifugal force throws them outward. In moving, they act on a rod that operates the throttle; as the speed increases, they move outward more and more, and it

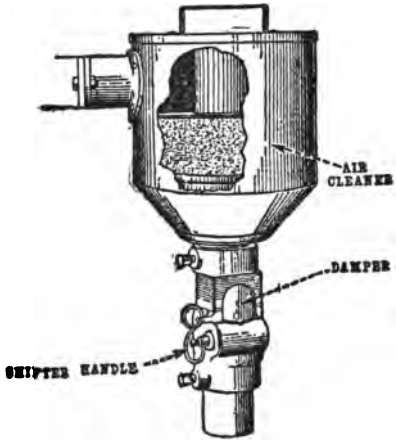

FIG. 37.—AIR STRAINER

is a simple matter of adjustment to cause them to close the throttle when the speed reaches a desired point.

A governor and its connections are shown in Figure 38. The weights, R, are L-shaped, and pivoted at the angle to a plate driven

by the engine. The shaft that drives the plate also supports a collar, P, that is loose on it and can slide endways; the collar rests

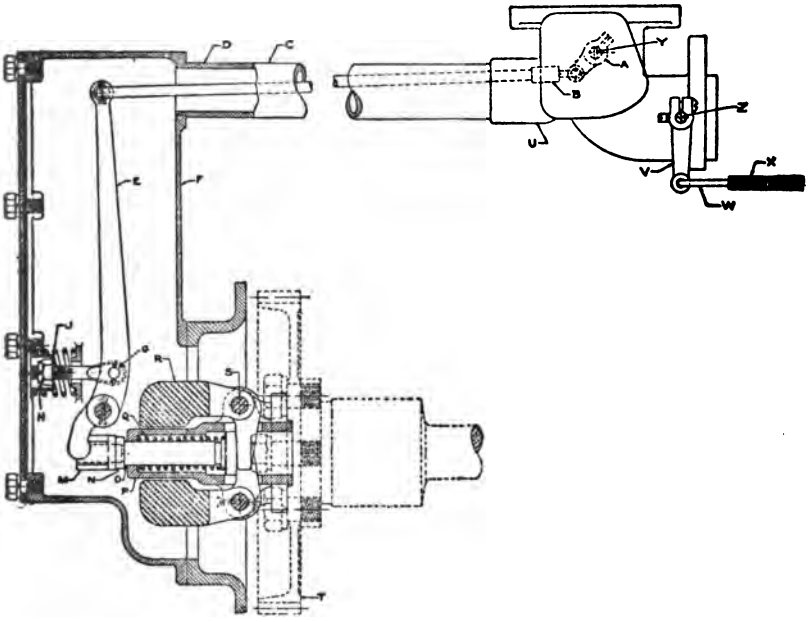

FIG. 38.—"E-B" GOVERNOR

against the short bar of the L-shaped weights. The other end of the collar touches the lever, E, which is moved when the collar

moves. As the lever is connected with the throttle, a movement of the collar will control the position of the throttle.

When the shaft revolves, the long arms of

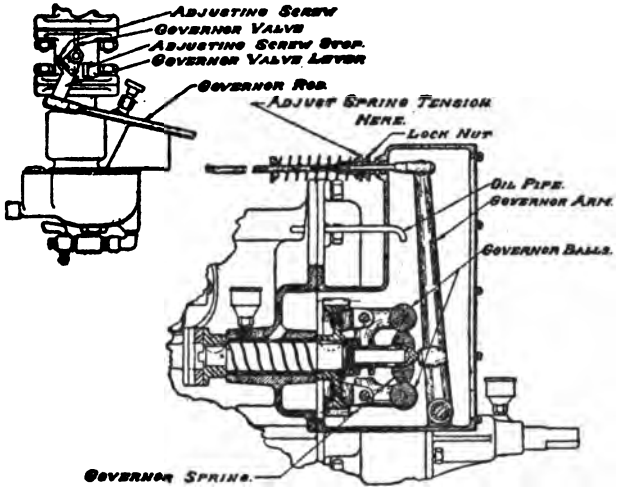

Fig. 39.—"Case" Governor

the L-shaped weights tend to fly outward; this moves them on their pivots, and the short arms thereupon force the collar to slide on the shaft, which moves the lever and operates the throttle. The speed at which the

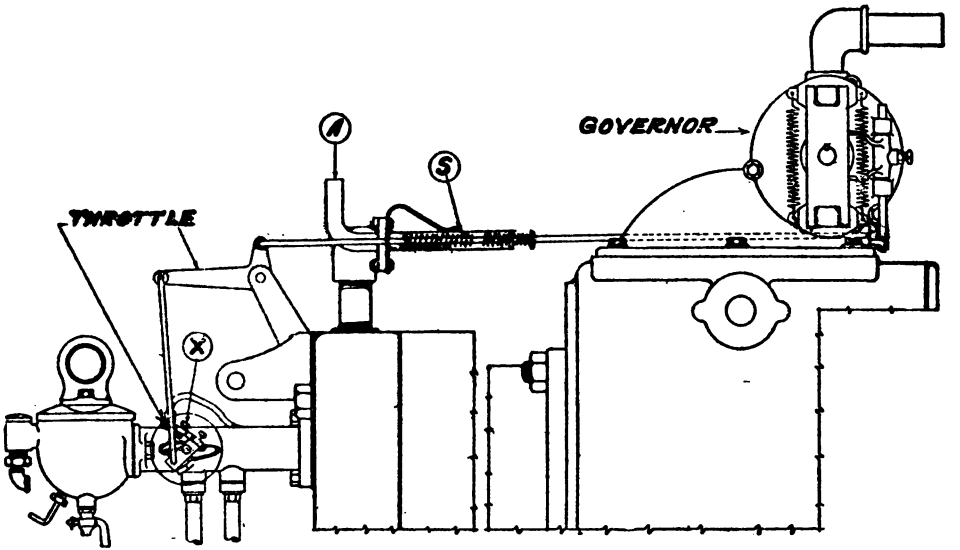

FIG. 40.—"HART-PARR" GOVERNOR

throttle will begin to close is determined by the setting of the spring that holds the weights in.

Governors and governor connections are shown in Figures 39 and 40.

The governor shown in Figure 41 is enclosed in a housing that can be locked or sealed. This prevents the unauthorized changing of the adjustment.

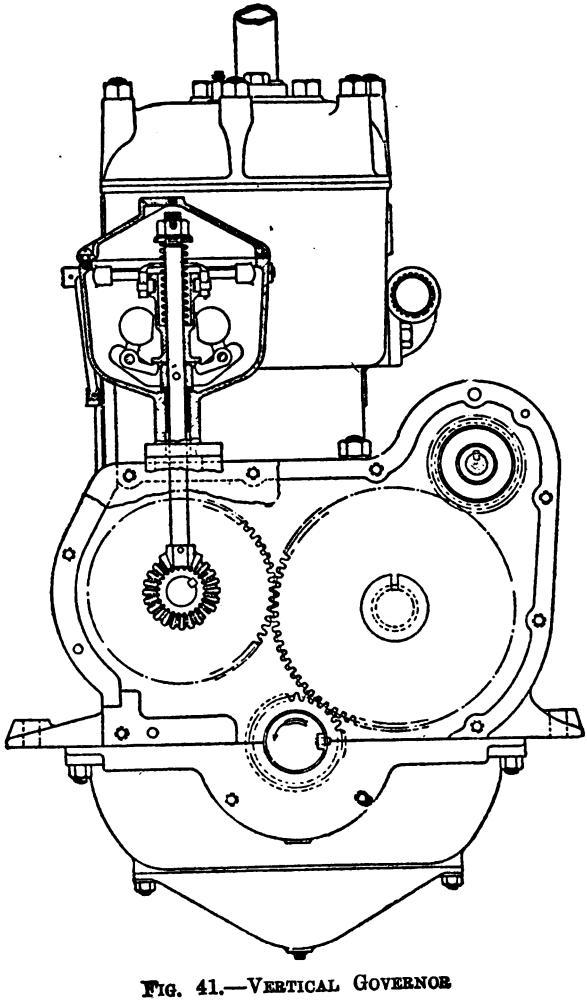

FIG. 41.—VERTICAL GOVERNOR

CHAPTER VI

IGNITION

In order that a gas engine may run properly, the mixture must be set on fire, or *ignited,* at exactly the right time; if ignition occurs too early or too late, there will be a loss of power.

The greatest pressure will be obtained at the instant when all of the mixture is burning, and this should take place just as the piston begins to move outward on the power stroke. A little time is required for the mixture to burn; there is a brief interval between the instant when it is set on fire and the instant when it is all in flame. Thus it is clear that if the mixture is all to be burning as the piston starts the power stroke, it must be set on fire before that time, or, in

other words, toward the end of the compression stroke.

The point at which ignition should occur depends on the speed of the engine and should change when the speed changes. The time required for the flame to spread throughout the mixture does not change; let us say that, with the engine running at 1200 revolutions a minute, the mixture can be ignited when the piston is ¼-inch from the end of the compression stroke, and will all be in flame by the time the piston starts on the power stroke. If the engine is slowed down to 600 revolutions a minute and no change is made in the ignition, the mixture will all be in flame before the piston reaches the end of the compression stroke; pressure will then be produced before the piston is in position to perform the power stroke. The pressure will try to make the engine run backwards; it will sometimes be sufficient to make the engine stop. If the momentum of the flywheel is sufficient to force the piston to the

end of the stroke against the pressure, this condition will cause a loss of power. This is called *preignition,* or ignition that occurs too soon. One effect of it is to produce a hard, metallic knocking, due to the oil being squeezed out of the bearings by the great pressure, which permits the bearing and shaft to strike. The remedy is to make ignition occur later in the stroke.

If the engine is speeded up above 1200 revolutions, the piston will have had time to move some distance on the power stroke before the mixture is all in flame; the combustion space will then be too large to permit the mixture to produce its greatest pressure, and again there will be a loss of power. The remedy in this case is to make ignition occur earlier in the compression stroke.

When ignition is made to occur early in the compression stroke, it is said to be *advanced;* when it is made to occur late in the stroke, it is said to be *retarded.*

To get the best results, the engine should

be run with ignition advanced as far as is possible without causing knocking.

The charge of mixture is always set on fire by an electric spark, and the parts that produce and control this spark are called the *ignition system.*

An ignition system consists of: First, the apparatus that produces the electric current, which is usually a *magneto;* second, a *timer,* which controls the instant at which the spark occurs; third, the *spark plugs,* which project into the cylinders, and at which the sparks take place; fourth, a *switch,* by which the sparking current can be turned on or off, and fifth, the wires, or *cables,* by which the parts are connected.

The electric current that gives the spark is always produced by magnetism. In a magneto, magnetism is obtained from the heavy steel magnets that are part of it; there is a constant flow of magnetism from one end of these to the other. To obtain an electric current, a coil of wire is placed in the magne-

tism, and the strength of the magnetism is made to change; it alternately becomes weak and strong. Whenever a change in strength takes place, an electric current flows in the wire, and it continues to flow as long as the magnetism continues to change in strength. When the change in strength is very great, that is, when the magnetism changes from very weak to very strong, or from very strong to very weak, the electric current is more powerful than when there is only a little change in strength. A more powerful current is also produced by a change that takes place suddenly than by a change that takes place slowly.

The electrical principle that produces a current in this manner is called *induction;* the current produced is known as an *induced* current.

A magneto has two or more magnets, and between their ends, or *poles,* there revolves a piece of iron called the *armature.* A piece of iron placed between the poles of a magnet

becomes a magnet itself; the armature is so shaped that, as it revolves, its magnetism continually changes in strength, and it is the changes in the strength of the magnetism of the armature that produce the sparking current.

The iron armature of the Bosch magneto,

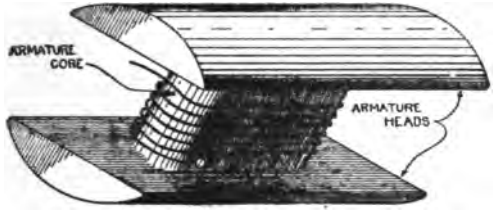

FIG. 42.—ARMATURE

which is the best known type, is shown in Figure 42. It has a central bar with two heads, the wire being wound around the central bar, or *core*. The shafts on which it revolves are attached to the ends of the heads.

Figure 43 shows different positions of the armature between the poles of the magnet, and illustrates the changes in the magnetism of the central bar. There is a continual flow

of magnetism from one pole of a magnet to the other; if a piece of iron lies between them the magnetism will use it as a bridge, but often its easiest path will be through the air. In A, Figure 43, the armature lies crossways, and its central bar or core forms a perfect

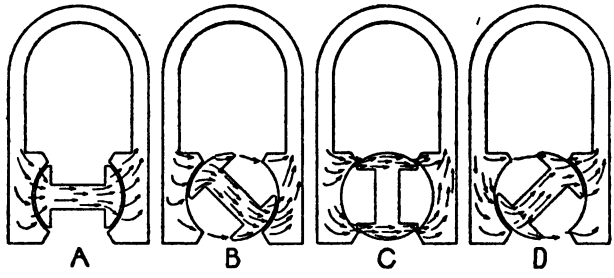

FIG. 43.—FLOW OF MAGNETISM THROUGH ARMATURE CORE

bridge for the magnetism. Practically all of the magnetism flows through it, and it then becomes a powerful magnet itself. It sets up its own flow of magnetism, which flows through the core to one head, through the air to the other head, and so back to the core.

In B, the armature has revolved a little. Most of the magnetism is still flowing through

the core, but some of it is finding an easier path by flowing through the heads and across the air space to the other pole. The magnetism of the core is, therefore, a little weaker than it is in A.

In C, the heads alone form bridges between the poles, and none of the magnetism flows by the core because that no longer forms a path. The core is no longer producing magnetism; in moving from A to C there has thus been a complete change in the strength of the magnetism of the core, for from full strength it has died away to nothing.

By a further movement, as in D, the core again acts as a bridge, and another change in strength occurs, this time from nothing to full strength again. In moving from D to B, there are slight changes in strength, but not enough to produce a sparking current; it is only in passing from B to D that a sparking current can be produced.

In this type of magneto the space between the heads is wound full of wire, which of

course revolves with the armature; the more turns of wire there are, the more intense will be the current, so very fine wire is used to get the greatest possible number of turns.

In the Bosch magneto the first few layers are of coarse wire, and are the *primary winding*. The remainder, called the *secondary winding*, is very fine wire, and the two are connected so that one forms an extension of the other.

It has been explained that it is most important to have the spark occur at exactly the right instant in the stroke. On a magneto the instant of sparking is controlled by a *timer*, or *circuit breaker*, which is a switch that is automatically operated at the time when the magneto is producing a current sufficiently intense to form a spark.

Figure 44 illustrates one complete revolution of the armature, and it will be seen that it passes twice from position B to position D. This shows that it gives a sparking current twice during each revolution. The circuit

breaker must therefore operate twice during each revolution. It is placed at the end of the magneto; in some makes it revolves with the armature and is operated by stationary cams,

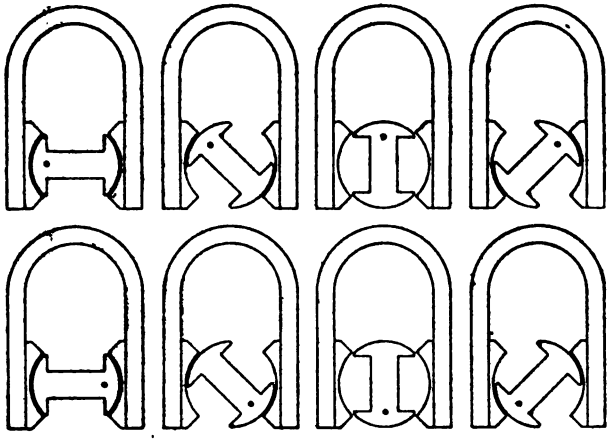

FIG. 44.—ONE COMPLETE REVOLUTION OF THE ARMATURE

while in others it is stationary, and is operated by a cam on the armature shaft. In either case the effect is the same.

Figure 45 shows the way in which the winding on the armature of a Bosch magneto is connected with the circuit-breaker and with the armature. The circuit-breaker shown is

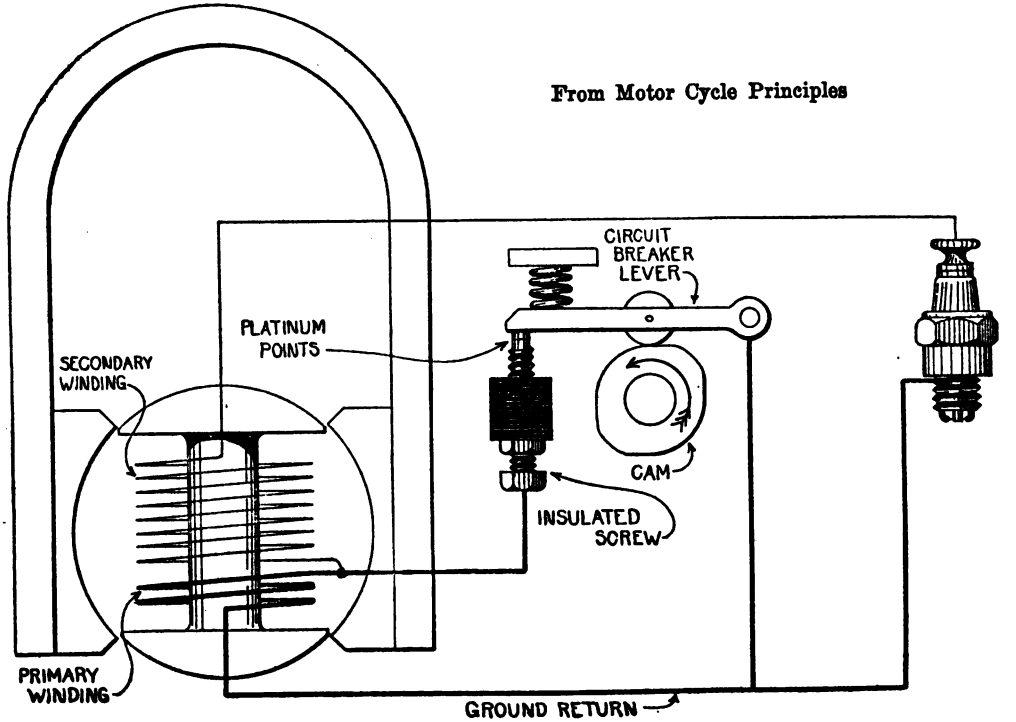

FIG. 45.—CONNECTIONS OF BOSCH MAGNETO

not the kind used on the Bosch, and serves only to illustrate the principle. It consists of a lever pivoted at one end, with the other end resting against the tip of a screw. A cam bears against the lever and can move it to break the contact with the screw. The cam is so set that it moves the lever at the time when the current is most intense.

The coarse wire, or primary winding, on the armature is connected with the lever and with the screw of the circuit-breaker; when the lever is touching the screw, any current produced in the primary winding has a complete path, or *circuit,* in which to flow.

The fine wire, or secondary winding, is wound on top of the primary, and its inmost end is connected to the outmost end of the primary so that one forms a continuation of the other. The outmost end of the secondary leads to the spark plug; any current produced in the secondary winding flows to the spark plug, and, if intense enough, will jump across

the small gap in the plug, and return to the secondary by way of the primary.

Referring to Figure 43, a weak current is produced in the primary while the armature revolves from D to B; at that time the circuit breaker is closed, so the current can flow in the path thus provided for it. A current also tries to flow in the secondary, but is too weak to jump across the gap in the spark plug. As the armature comes closer to the point C, Figure 43, the primary current becomes more intense, and the electricity in the secondary increases its endeavor to jump the gap in the spark plug, but is still unable to do so.

As the armature passes over the point C, the circuit breaker opens. The primary current, which is then most intense, finds its path taken away from it, and it seeks another, which it finds by flowing into the secondary winding. This flow of primary current, added to the pressure already existing in the secondary, forms a current sufficiently intense to

jump across the gap in the spark plug, and in so jumping it produces the ignition spark.

As the armature passes to position D, Figure 43, the circuit breaker closes, and the action is repeated.

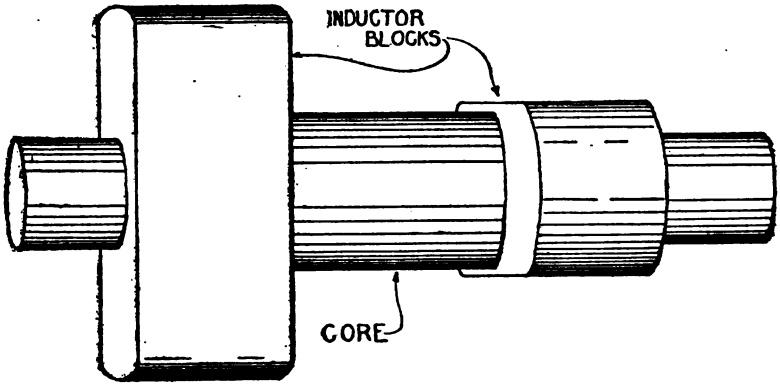

FIG. 46.—"K-W" INDUCTOR

A magneto of this type is thus seen to give two sparks to every revolution of the armature.

K-W and Dixie magnetos operate on the same general principle as the Bosch, with the difference that the wire windings are separate from the armature, and do not re-

volve. The revolving part, which is called an *inductor,* consists of blocks of iron, so shaped that, as they revolve, they alternately lead the magnetism to the core of the winding and then away from it. The result is that the core gains magnetism and then loses it, and these continual changes in strength produce sparking currents in the winding.

The inductor of a K-W magneto is shown in Figure 46. It consists of a shaft on which are mounted two blocks of iron at right angles. The section of shaft that joins them is the core of the winding; the wire is wound on it just as thread is wound on a spool, but with a space between, so that the shaft may revolve inside of the coil.

Figure 47 shows the inductor in three positions of its revolution between the poles of the magnet. When it is in the first position, magnetism can flow from one pole of the magnet to the other by going into one end, A, of one block, through the core, and out of one end, C, of the other block. This makes

a magnet of the core and it forms magnetism of its own. When the inductor turns to the second position magnetism can get across without flowing through the core, for the

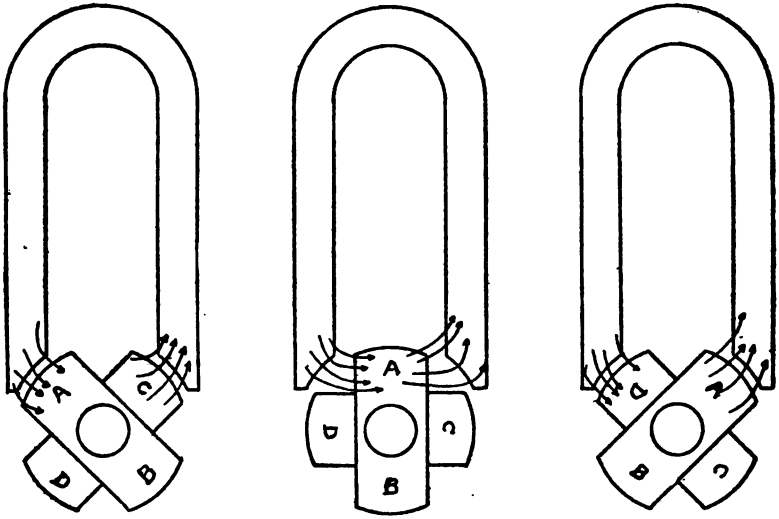

FIG. 47.—"K-W" INDUCTOR IN THREE POSITIONS

blocks now give it a path. As the flow through the core ceases, the core's magnetism dies away, which gives the change in strength that is needed to produce a sparking current.

When the inductor is in the third position,

the core again becomes the path for the magnetism and is magnetized; these changes continue as long as the inductor turns.

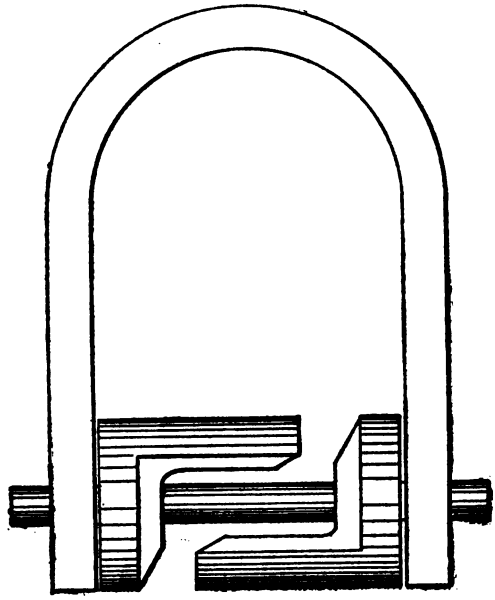

FIG. 48.—"DIXIE" INDUCTOR

While an armature type of magneto, like the Bosch, produces two sparks to every revolution, the K-W produces four, for there are four periods during every revolution

when there is sufficient change in the strength of the magnetism of the core to produce a sparking current.

In these magnetos the revolving shaft is parallel to the ends of the magnets, but in the Dixie magneto it is at a right angle, as shown in Figure 48. The shaft is of some metal, such as brass or bronze, through which magnetism will not flow; otherwise the shaft would form a continuous path. The inductor blocks are mounted on the shaft, and act as extensions of the poles of the magnet. The core on which the wire is wound is a separate piece, placed under the arch of the magnets, with ends that extend down and form a tunnel in which the inductor revolves.

Figure 49 shows an end view of the inductor, the magnets being cut away so that the core may be seen. As inductor block A is an extension of one pole of the magnet, magnetism tries to flow from it to block B, which is an extension of the other pole of the magnet. When the inductor is in position

1, Figure 49, magnetism can flow from block A through the core to block B, the core then being magnetized. In position 2, magnetism can flow from one block to the other by going through the ends of the core instead of

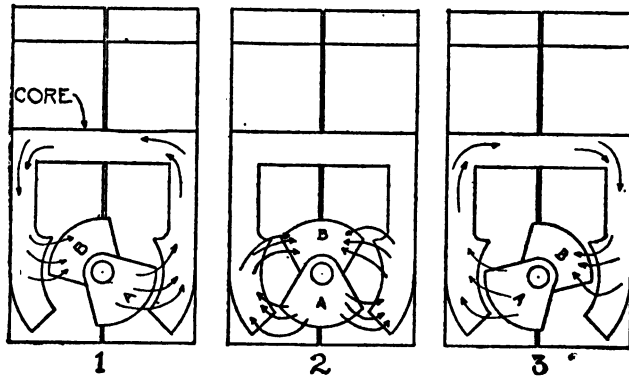

FIG. 49.—THREE POSITIONS OF "DIXIE" INDUCTOR

through the core itself; the core then loses its magnetism, but regains it when the inductor moves to position 3.

In practically all makes of magnetos the circuit breaker is at the end of the armature or inductor shaft, and is operated by it. The Bosch circuit breaker is illustrated in Figure

50, the parts being mounted on a plate attached to the shaft and revolving with it. The lever is L-shaped, pivoted at the angle, with one end resting on the tip of a screw.

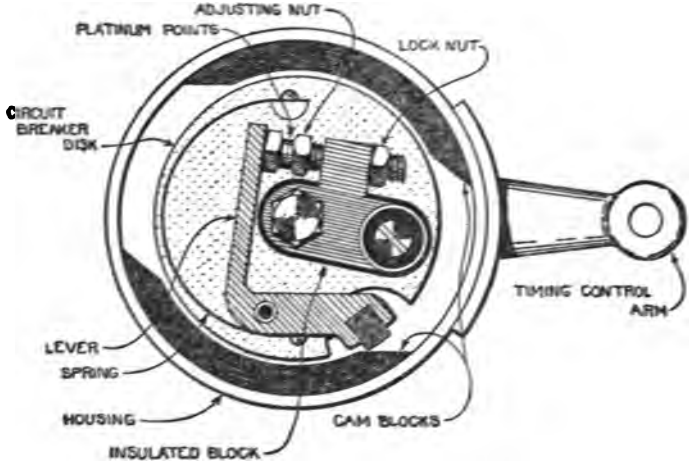

FIG. 50.—"BOSCH" CIRCUIT BREAKER

When the shaft revolves, the other end of the lever is dragged over a block of metal that acts as a cam; this makes it move on its pivot and separates it from the screw. By turning the screw the distance of separation may be adjusted.

In the circuit breaker of the K-W magneto it is the cam that revolves, while the lever is stationary, as shown in Figure 51. It will be noticed that the cam will move the lever only twice during each revolution; the magneto

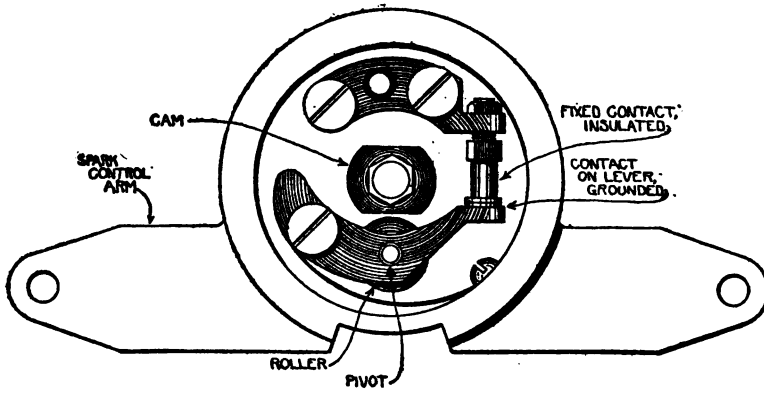

FIG. 51.—"K-W" CIRCUIT BREAKER

can produce four sparks during a revolution, but with this arrangement of the cam only two of them are used.

It has been said that an intense sparking current is produced when there is a great change in the strength of the magnetism, and when the change in strength occurs suddenly.

There cannot be any alteration in the change in strength, for the greatest magnetic strength of the core is what is given it by the magnet, and changing from this to nothing is the greatest change possible. The suddenness with which the change takes place, however, depends on the speed at which the magneto runs. A 4-cylinder engine requires two sparks to each revolution of the crank shaft; the armature of a Bosch magneto for this engine will therefore run at the same speed as the crank shaft.

The K-W magneto, giving four sparks to the revolution, could run at half of the speed of the crank shaft, but then the change in the strength of the magnetism would take place slowly, and the sparking current would not be sufficiently intense. By using only two of the sparks the magneto is run at the same speed as the crank shaft; the change in strength then takes place more suddenly, and a more intense sparking current is produced.

The circuit breaker of a magneto for a

1-cylinder engine has only one cam, so that a single spark is produced during each revolution of the armature; the armature makes one revolution to every two revolutions of the crank shaft.

However many cylinders an engine may have, the magneto must be revolved from one point of sparking to the next in the interval between ignition in one cylinder and ignition in the next cylinder to fire. A magneto is driven by the crank shaft through gears or by a chain, which are so proportioned and set that the magneto is at a point of sparking at the instant when a piston is in position for ignition.

A magneto for an engine with more than one cylinder is provided with a *distributor*, which passes the sparking current to the particular cylinder that is ready for ignition. A distributor is a revolving switch built into the magneto, with as many *points*, or *contacts*, as the engine has cylinders. At the instant when the magneto produces a sparking cur-

rent, the revolving distributor arm is in position to pass the current to one of the contacts, and the current flows to the spark plug with which it is connected.

An electric current must have a complete path, or circuit, in order to be able to flow. In a magneto ignition system this path is partly of wire and partly of the metal of the engine. The diagram in Figure 45 indicates that the current returns to the magneto from the circuit breaker lever and the spark plug by wire, but in actual construction it returns by the metal of the engine. This is called a *ground return;* the circuit is said to be *grounded.*

Figure 52 is a side view of a Bosch magneto, partly broken away to show the interior. As can be seen, one end of the primary winding is screwed to the armature, and is thereby connected with the metal of the magneto; as the magneto is attached to the engine the primary winding is thus in contact with that also. The other end of the

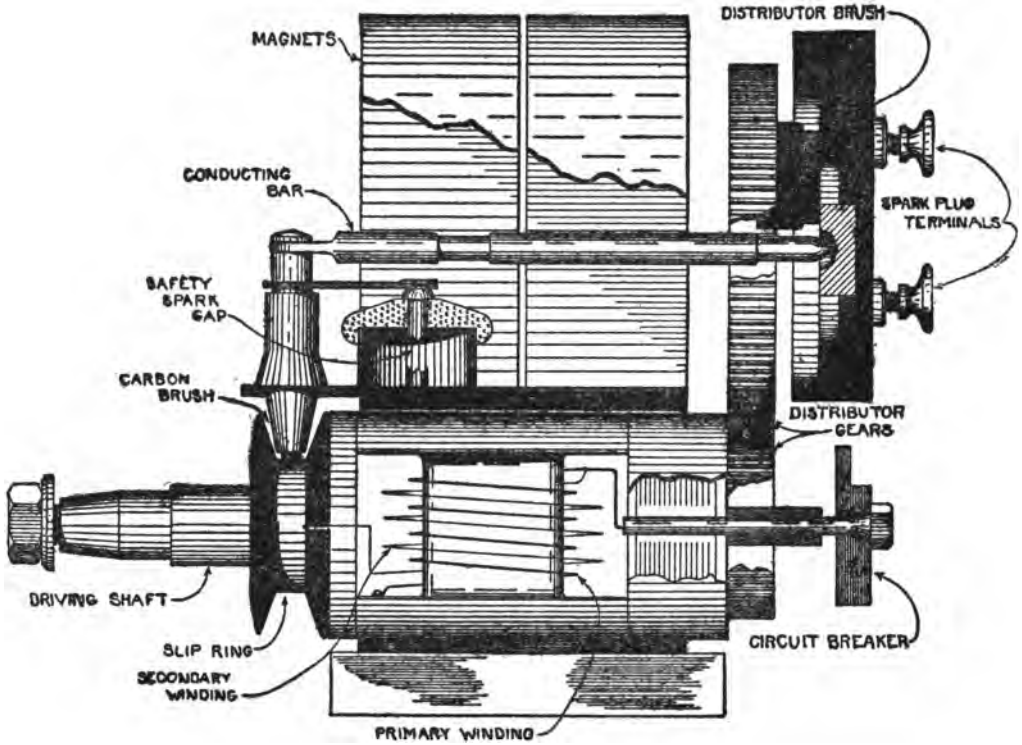

FIG. 52.—"BOSCH" MAGNETO IN SECTION

primary winding leads to the insulated block of the circuit breaker, Figure 50. This block is *insulated* from the disk; that is, while it is attached to the disk, it is kept from touching it by means of pieces of hard rubber or mica. Through these an electric current cannot pass.

The lever is grounded; that is, it is in contact with the metal of the magneto. When the lever touches the screw of the insulated block, current can flow; when they are separated, the circuit is broken.

One end of the secondary winding, Figure 52, is attached to the outer end of the primary. The other end leads to the *slip ring,* which is a metal rim on a hard rubber wheel attached to the armature and revolving with it. Sparking current flowing to the slip ring is led off by a carbon brush and passed to the distributor.

Should a spark plug wire fall off while the engine is running, the current would lose its path and would seek another; it is quite

powerful enough to make a path for itself by breaking through the windings. As this would injure the magneto, such a thing is prevented by providing a *safety spark gap*, which acts like a safety valve in giving the current a path when the regular path is interrupted. It consists of two points of metal, one attached to the metal of the magneto and the other connected with the slip ring brush; it is a more difficult path than the one through the spark plug, but easier than breaking down the windings.

Figure 53 is a section of the K-W magneto. As the coil does not revolve, no slip ring is necessary; the sparking current flows directly to the distributor.

To start an engine, the crank shaft must be turned at sufficient speed to drive the magneto fast enough to produce a spark. With large engines this is often a difficult matter, so it is very usual to equip a magneto with an *impulse starter*. One part of this is attached to the magneto shaft and the other

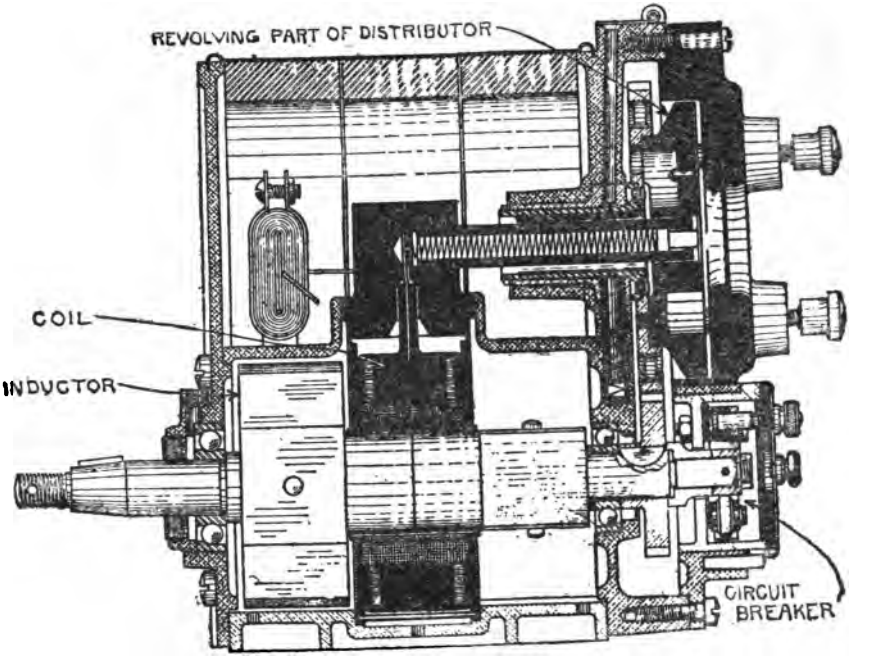

Fig. 53.—"K-W" Magneto in Section

to the engine shaft that drives the magneto; the two are connected by a spring. When starting, a catch holds the armature and prevents it from turning. The drive shaft turns, however, and in so doing winds up the spring. At a certain point the catch is automatically released, and the spring then throws the armature over at a speed that gives a good spark. A spark is thus assured, even though the engine is being cranked very slowly.

CHAPTER VII

BATTERY IGNITION SYSTEMS

While the greater number of tractor engines use magneto ignition, many use battery and coil systems, which are the same in general principle as magneto systems, but produce magnetism in a different manner.

Copper is a *nonmagnetic* metal; that is, magnetism will not flow through it, nor can it be magnetized. If a pile of iron filings is stirred with a copper wire there will be no effect, as might be expected; but if a current of electricity flows through the wire, the iron filings will cling to it, as shown in Figure 54, as if it were a real magnet.

It is one of the principles of electricity that when a current flows through a wire, the wire is surrounded by magnetism, which continues as long as the current flows; when

the circuit is broken and the current stops flowing, the magnetism dies away. The magnetism produced is feeble and can be very greatly increased by winding the wire around an iron bar. The magnetism produced by

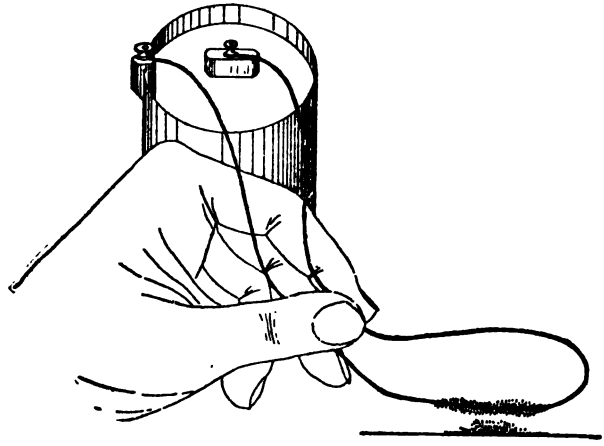

FIG. 54.—MAGNETISM IN A COPPER WIRE

the current then flows into the bar, and that, like the core of the winding of a magneto, throws out magnetism of its own. This is indicated in Figure 55. By changing the intensity of the electric current, or by cutting it off, the strength of the magnetism can be

made to change, and this change of strength can produce a sparking current.

The principle employed is illustrated in Figure 56. A is a coil of wire wound around one end of an iron bar and connected with

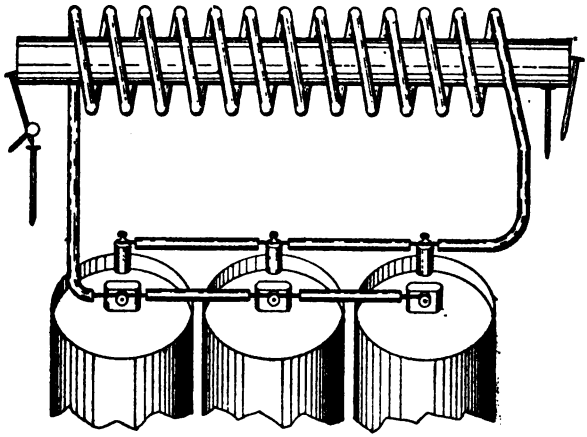

FIG. 55.—MAGNETISM FROM ELECTRICITY

a battery; B is an entirely separate coil of wire wound around the other end of the bar, with its ends separated by a short distance. By closing the battery switch the current will be permitted to flow in coil A, and the bar will become magnetized; the magnetism that

it throws out will be felt by coil B. When the switch is opened the current stops flowing and the magnetism dies out of the bar; these changes in strength will create an electric current in coil B, which will form a spark

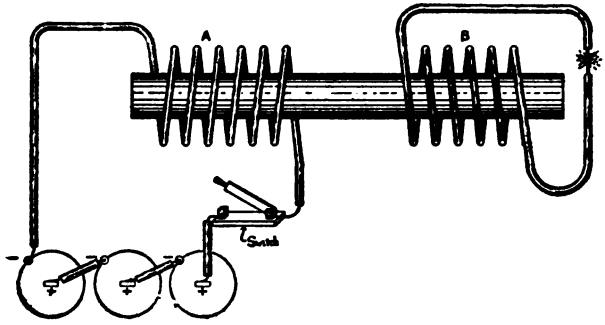

FIG. 56.—PRINCIPLE OF SPARK COIL

as it passes across the space between the ends.

In ignition coils, coil B is wound on top of coil A. Coil A, called the *primary winding*, consists of a few layers of coarse wire. The more turns of wire there are in coil B, called the *secondary winding*, the more intense will be the current that it produces, and the in-

tensity is also increased by keeping the windings close to the iron core. The secondary winding is, therefore, made of exceedingly fine wire, and has a very great number of turns.

To obtain a spark, a current is permitted to flow through the primary winding to create magnetism, and the flow is then stopped to cause the magnetism to die away. The secondary winding is affected by each of these changes in magnetic strength. The bar loses magnetism more rapidly than it gains it, however; it is therefore the dying out of the magnetism that has the greater effect on the secondary winding, and that causes it to produce a sparking current.

To use this principle for ignition, the engine is fitted with a revolving switch, which closes the circuit as a piston is on the compression stroke, and then breaks the circuit at the instant when a spark is desired. Combined with the revolving switch, or *timer*, is a distributor like the distributor of a mag-

neto, which passes the sparking current to the cylinder that is ready to receive it.

To produce an intense sparking current, it

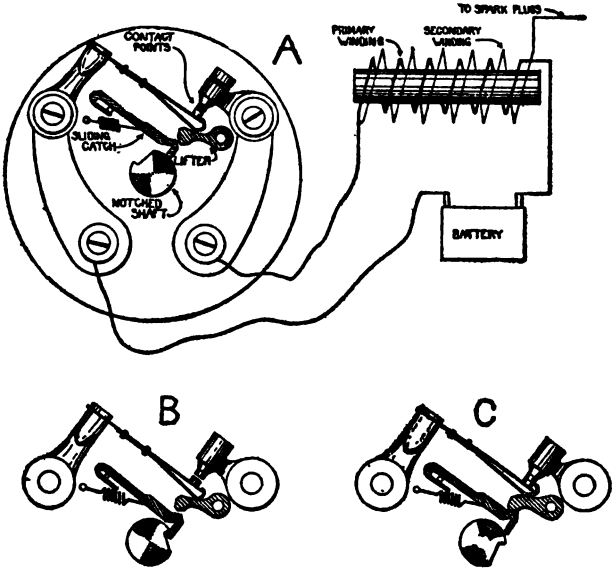

FIG. 57.—"ATWATER-KENT" IGNITION SYSTEM

is necessary to break the circuit as abruptly as possible, in order to cause the magnetism to die away suddenly. Figure 57 shows how this is done in the Atwater-Kent system.

The parts of the circuit breaker are car-

ried on a plate, in the center of which revolves a shaft with a notch in it. Against the side of this shaft rests the hooked end of the sliding catch; as the notch comes under this hooked end, the sliding catch is drawn forward, only to be snapped back by its spring as the notch moves from under it. The lifter is a bit of metal, pivoted at one end, with its free end lying between the sliding catch and the flat steel spring that carries one of the contact points.

A, Figure 57, is a diagram of the system. B shows the position of the parts as the notch carries the sliding catch forward, and C shows their positions as the spring snaps the sliding catch back to its place. It will be seen that in thus moving back it strikes the lifter, which in turn moves the contact spring, and so closes the circuit; but the circuit is instantly broken as the parts spring back to position. The movement of the parts is so rapid that to the eye they seem to be standing still. The circuit is closed only for an

instant, but that is sufficient to magnetize and demagnetize the coil, and to produce a sparking current.

The operation of this system depends on the very great swiftness with which the circuit is made and broken; there is not sufficient time for the core to get thoroughly magnetized, but such magnetism as is produced changes strength so quickly that it gives a sufficiently intense current to create an ignition spark.

In other battery systems of like principle, the circuit is closed for a long enough time to allow the core to become fully magnetized, the circuit then being suddenly broken. In some of these systems the timer breaks the circuit, while in others it is broken by the magnetism, through a *vibrator*.

A *vibrator coil* system is illustrated in Figure 58. The timer is a ring made of some kind of insulating material, with a plate of metal set in it and forming one of the timer contacts. The other contact is the revolving

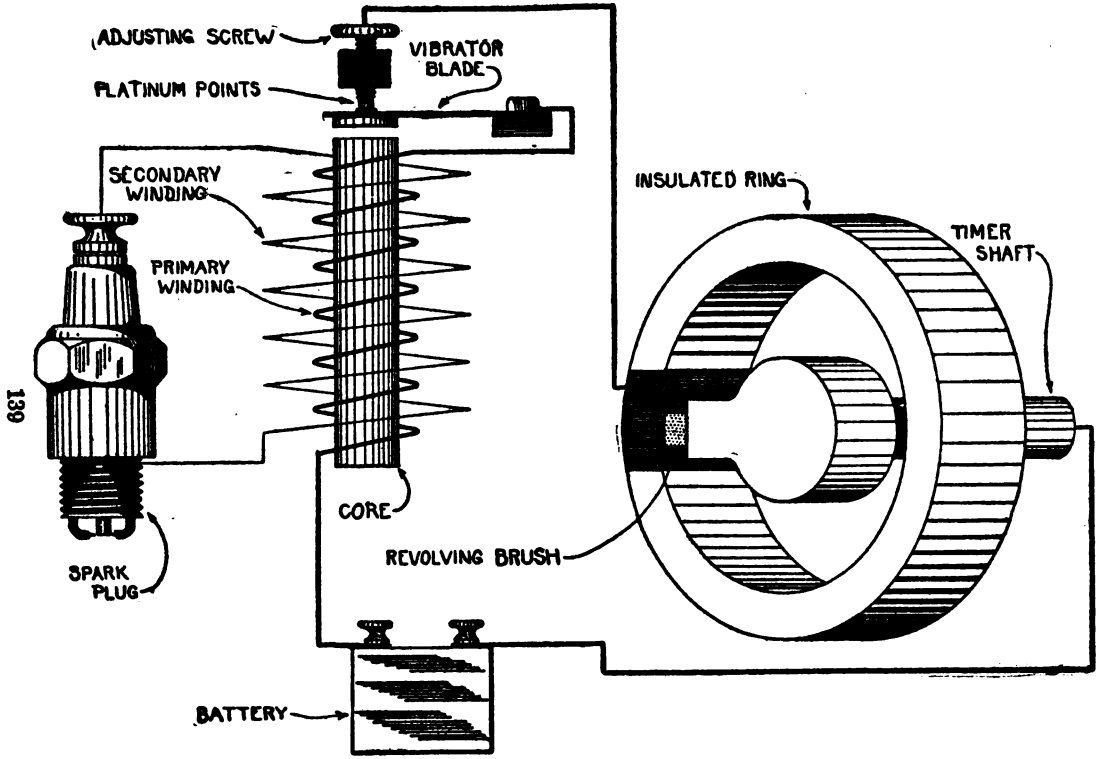

FIG. 58.—VIBRATOR COIL IGNITION SYSTEM

brush, driven by the engine; the circuit is closed when the brush touches the metal plate.

Opposite the end of the core is a flat steel spring, or *vibrator blade,* resting against the tip of a screw; when the core is magnetized it draws the end of the blade to it, and separates it from the screw. The battery current flows from the timer contact to the screw, then to the vibrator blade and to the primary winding of the coil. The core then becomes magnetized, and draws the blade away from the screw, which breaks the circuit; this causes the magnetism to die away, and a sparking current is produced in the secondary winding of the coil. The vibrator blade, no longer held down by the magnetism, springs back against the screw; the circuit is again made, and the action is repeated. The movement of the vibrator blade is very rapid, being some hundreds of vibrations a second.

A spark plug is illustrated in Figure 59.

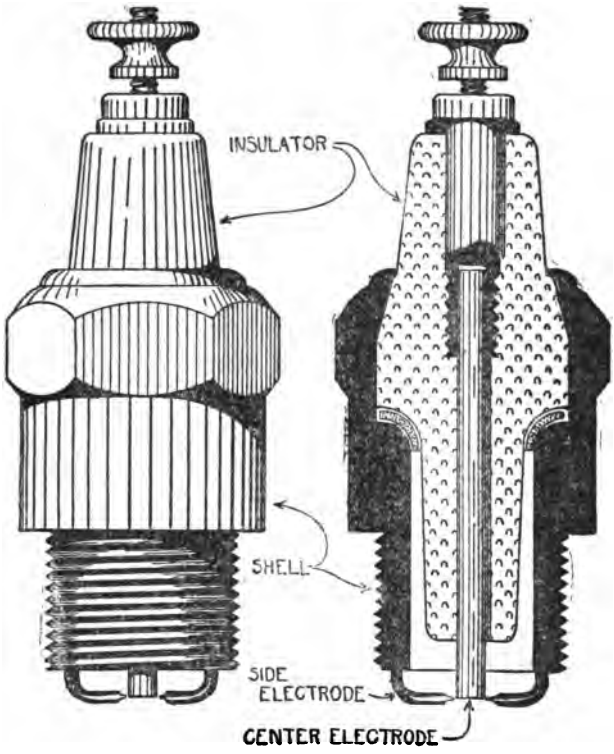

FIG. 59.—SPARK PLUG

It consists of a metal shell screwed into the cylinder, enclosing an *insulator* of porcelain, mica, or some similar material. Through the insulator passes the center electrode, which

is a rod of metal, with its lower end separated by a short distance from the shell or from a wire attached to the shell. This separation is the gap across which the sparking current passes, and at which the spark occurs.

Spark plugs receive the pressure of the power stroke, and must be strongly made in order to withstand it. A leaky spark plug will cut down the power of the engine, just as a leaky valve will.

CHAPTER VIII

TRANSMISSION

The parts of a tractor by which the power of the engine is applied to the driving wheels are called the *transmission,* and include the *clutch,* the *change speed gear,* the *differential* and the *drive.*

It has been shown that a gas engine delivers power only when it is running at speed; it cannot run until some outside power drives it through the inlet and compression strokes.

The tractor cannot move until the engine is running and delivering power, and it follows, therefore, that it must be possible to disconnect the engine from the driving mechanism in order that it may run independently. This is done by means of a *clutch,* which is a device that connects two shafts, or disconnects them.

A clutch must be so made that when it is engaged it takes hold, not suddenly, but gradually. If it took hold suddenly, the

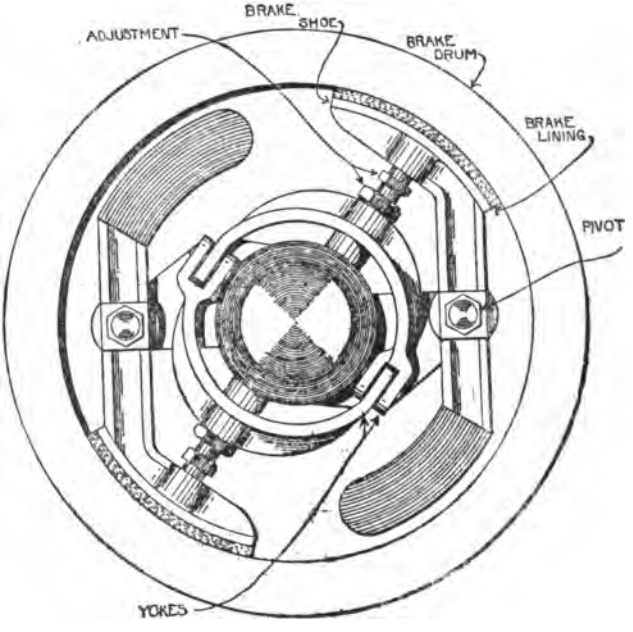

FIG. 60.—INTERNAL CLUTCH

tractor would be required to jump at once into full motion; this would cause a severe straining of the parts and probable breakage.

The alternative would be the abrupt stopping of the engine, and this would also strain things.

By making the clutch in such a way that it slips, and takes hold little by little, the tractor starts slowly, and gradually comes up to speed; the slipping of the clutch then ceases, and it takes hold firmly.

All clutches operate by the friction of one surface against another; in some, the surfaces are curved and in others flat, while in still others the clutch is a band around a wheel, or *drum*. A clutch is operated by a hand lever or by a foot pedal.

Figure 60 shows a type of clutch that operates inside a drum, which is often the overhanging rim of the flywheel. The shaft in the center is independent of the flywheel, and it is the purpose of the clutch, which is attached to the shaft, to lock the shaft and flywheel together when the tractor is to be started.

The brake shoes, which bear against the

drum, form the ends of pivoted levers, and are lined with an asbestos material that resists the heat caused by the friction against the drum.

A cone-shaped block of steel slides lengthways on the shaft; when it is pushed into position, it forces out the yokes, and thus presses the brake shoes against the drum.

A *plate clutch,* or *disk clutch,* is shown in Figure 61. The principle of a plate clutch may be illustrated by placing a half-dollar between two quarters and pinching them with the thumb and forefinger. If they are held loosely, the half-dollar may be turned between the quarters, but if they are pinched tightly, the friction between the coins will be so great that one cannot be turned without turning the others.

Attached to the flywheel are studs, which support a disk, or plate; this plate revolves with the flywheel, and is practically a part of it. On either side of this plate are other plates that are supported on the drive shaft;

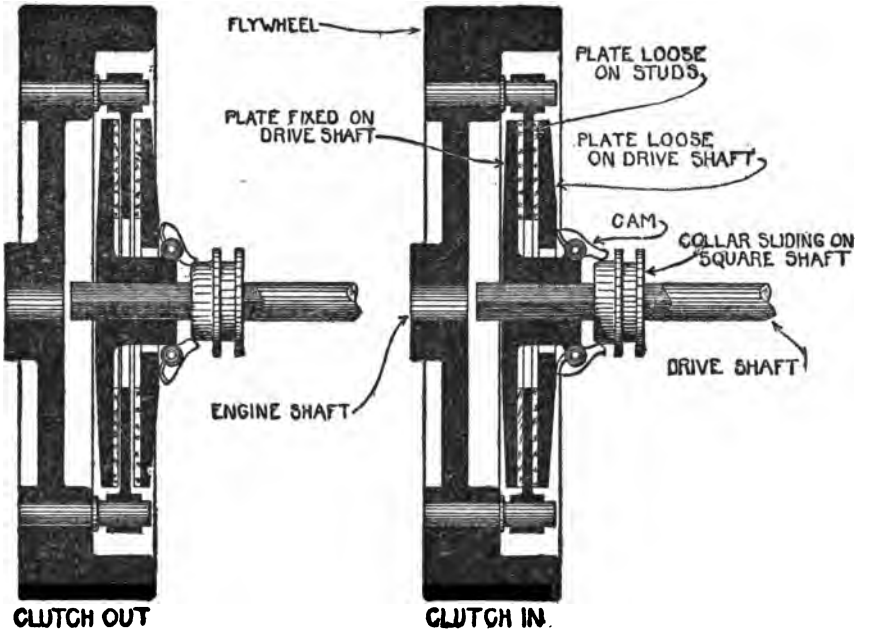

FIG. 61.—PLATE CLUTCH

they revolve with it, but can slide along it. The end of the shaft is square and fits a square hole in a collar, so that while the collar may slide along the shaft, the two must turn together. Cams are mounted on the hub of one of the plates in such a position that they can press the outside plates together and pinch the flywheel plate between. The cams are operated by pressing the collar against them.

The first drawing shows the clutch out, or released; the flywheel may then turn without turning the shaft, for the plates are not in contact. The second drawing shows the clutch in, or engaged. The collar is pressed against the cams, and the plates in turn are drawn together, pinching the flywheel plate between them. The flywheel and the drive shaft then revolve together.

Plate clutches are often made with more than three plates; some makes run in a bath of oil, and some are intended to work dry.

In a cone clutch, the overhanging rim of

the flywheel is funnel-shaped, and into it fits a cone-shaped disk carried on the end of the drive shaft. To engage the clutch, the disk is slid along the shaft against the flywheel, the friction between the two being sufficient to drive the shaft.

When a clutch is thrown in it should take hold gradually, slipping at first, but finally having a firm grip. When it is thrown out, it should release instantly and completely.

The power delivered by an engine depends on the *bore* and *stroke* of the cylinder, and on the speed. The greater the bore, or diameter of the cylinder, and the greater the stroke, or distance the piston moves in a half-revolution of the crank shaft, the larger will be the combustion space, and the larger will be the charge of mixture that it can take in; the larger the charge, the greater will be the power produced when the charge burns.

Each cylinder produces power once during every two revolutions of the crank shaft; if the engine runs at 1,000 revolutions per min-

ute there will be twice as many power strokes as there would be if it ran at 500 revolutions per minute, and during that minute it will produce twice as much power.

A traction engine is intended to run at a certain speed, at which it will produce its greatest power without overstraining its parts. This *normal speed* for any particular engine depends on the number of cylinders, their size and design, and other details established by the manufacturer. To get the best from the engine, this is the speed at which it should always be run.

The power required to move the tractor depends on various things; the hardness and smoothness of the ground, the grade, the load it is pulling, and so on. The tractor might be running on level ground, pulling so great a load that the engine is called on for all of the power that it can deliver.

On coming to a hill, still more power will be required, for now the tractor and its load must be lifted as well as moved forward. The

engine, already working at its limit, cannot deliver the extra power needed, and will slow down and stop unless something is done to aid it. In such a case, the change speed gear is used to give the engine a greater leverage on its work, just as a block and tackle gives a greater leverage or purchase to a man who must lift a heavy weight.

Let us say that the normal speed of the engine is 1,000 revolutions per minute, and that it is so connected that it makes 40 revolutions while the driving wheels make 1, the speed of the tractor being 3 miles per hour. If it is a 4-cylinder engine there will thus be 80 power strokes to every revolution of the driving wheels. The engine is delivering its full power and cannot do more should the tractor be called on for an extra exertion, such as climbing a hill or crossing rough ground.

By changing the connections between the engine and the driving wheels, the engine can be made to run twice as many revolutions

to one turn of the driving wheels, which will give double the number of power strokes; the wheels will thus be turned with twice the force. As no change is made in the speed of the engine, the wheels will now turn at half their former speed, and the tractor will run at 1½ miles per hour. It will, however, have twice the ability to overcome obstacles.

This change in the connections between the engine and the drive is performed by the *change speed gear,* which is driven by the engine and which in turn drives the wheels.

There are many varieties of change speed gears, but the main principle in them all is the same, for they depend on the action of cog-wheels, or *gears.*

When two gears running together, or *in mesh,* have the same number of teeth, they will revolve at the same speed. If one has half as many teeth as the other—10 teeth and 20, let us say—the 10-tooth gear will make two revolutions while the 20-tooth gear is making one.

There are two shafts in a change speed gear, one driven by the engine and the other driving the wheels; each carries gears that mesh with gears on the other shaft. These pairs of gears are of different sizes, and any pair may be used; the shaft driven by the engine runs as the engine runs, while the speed of the other shaft depends on the pair of gears that is being used.

By changing from one pair of gears to another, the driven shaft, and, consequently, the wheels, may be run at a greater or less number of revolutions, while the speed of the engine and the driving shaft do not change. The number of power strokes that occur during one revolution of the wheels is thus changed, and they turn with more force or with less.

High speed, or *high gear,* means the combination of gears that gives the greatest speed to the wheels, but the fewest power strokes to each revolution. The combination that gives the slowest speed to the wheels,

but the greatest number of power strokes, is called *low speed,* or *low gear.*

Many tractors have but two speeds, a low and a high; but others have an intermediate combination for conditions too severe for running on high gear but too easy for low.

The change speed gear mechanism also provides for reversing or backing the tractor. Two gears running together turn in opposite directions, while in a train of three gears the outside gears turn in the same direction. The usual combination in a change speed gear uses two gears for going ahead; to run the driven shaft the other way, which will make the tractor back, a third gear is meshed between the two.

The differences between various makes of change speed gears are in the methods used to put into action the desired pair of gears.

Two general plans are used. In one of them, a gear of each pair can slide endways on its shaft, but must revolve with it; thus it can be slid into mesh or out. In the other,

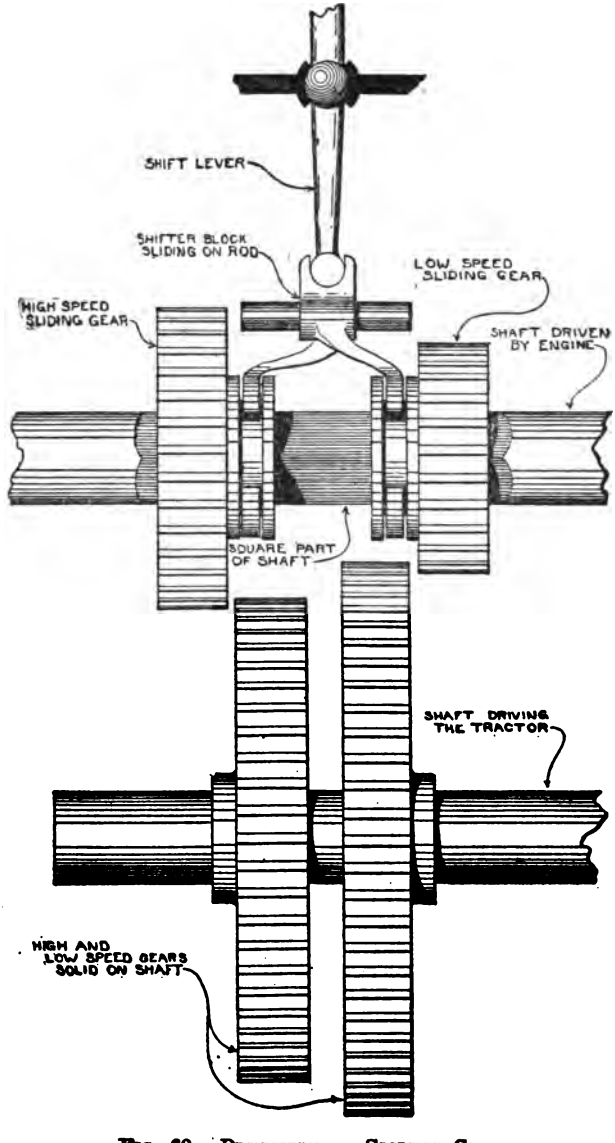

FIG. 62.—PRINCIPLE OF SLIDING GEAR

the gears of a pair are always in mesh, but one of them is loose on its shaft, so that shaft and gear can revolve independently. To make the pair of gears operate, the loose gear is locked to its shaft.

Figure 62 shows the principle of the *sliding gear* type. One part of the shaft driven by the engine is square, and fits into square holes in its gears, which may thus slide along it, but must revolve with it. Each sliding gear is moved by a shifter block, which is operated by a shift lever. There is a shifter block for each gear, and the shift lever may be moved sideways to operate either one of them.

Figure 63 shows the *jaw clutch* type of change speed gear, in which the gears are in mesh all of the time, but run loose on their shaft when they are not working. The drawing shows *bevel gears,* which are used when the driving and driven shafts are at a right angle. The same principle is used for *spur*

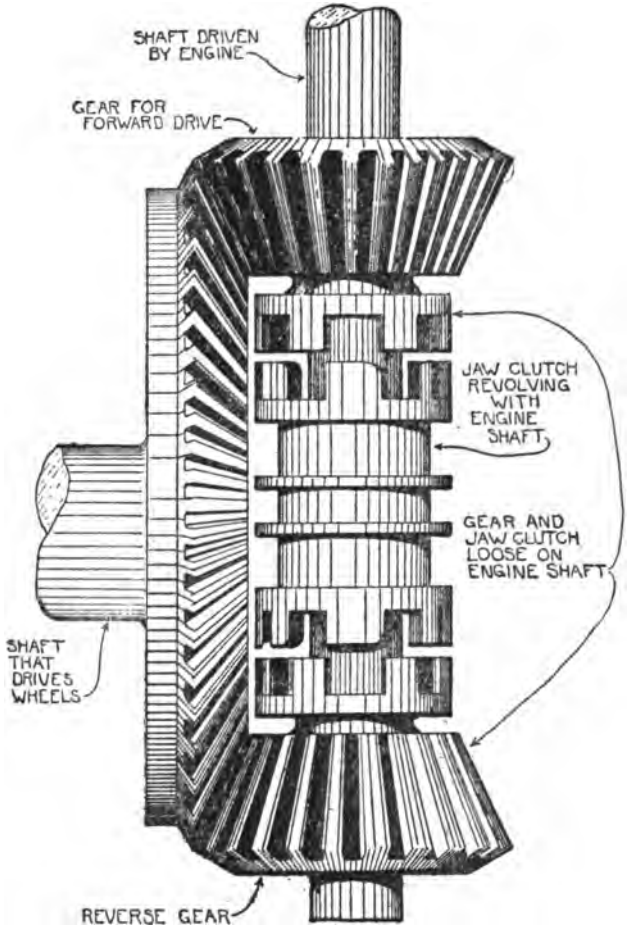

FIG. 63.—PRINCIPLE OF JAW CLUTCH CHANGE SPEED GEAR

gears on shafts that are parallel, as in Figure 62.

The center of the shaft is square, and fits a block that can slide endways, but that must revolve with it. The ends of the block have heavy teeth that can mesh with teeth on the hubs of the loose gears; meshing the block with one of the gears forces that gear to revolve with the shaft.

The drawing shows only one speed forward; the reverse is obtained by a second gear on the same shaft, which is placed on the opposite side of the center of the driven gear, and turns it in the opposite direction.

When a tractor turns, the outside wheel makes a larger circle than the inside wheel, and has a longer path to travel. Both wheels travel their paths in the same time, so it follows that the outside wheel must move faster than the inside wheel, although both are being driven by the engine. This is allowed for by the *differential,* which is driven by the change speed gear, and which in turn drives

the wheels; it operates automatically by the difference in the resistance to the rolling of the wheels.

The action of the differential is illustrated by an experiment that requires a pair of wheels on an axle, like buggy wheels, and a stick long enough to reach from one to the other. With the wheels on smooth ground, put the ends of the stick through the wheels at the top, each end pressing against a spoke. Hold the stick at its center and push it forward; the stick will transmit the pressure to the spokes, and the wheels will turn. The wheels being on smooth ground, there is equal resistance to their movement, and they will run straight forward.

Now repeat the experiment with the wheels so placed that one is on a smooth roadway and the other on sand; as the wheel on the smooth surface meets with less resistance than the other does, it moves faster, and the pair of wheels circles, although the stick applies equal pressure to both.

The power developed by the engine is transmitted by the differential to both rear wheels; when the wheels meet with equal resistance, they turn equally, but when one wheel meets with greater resistance than the other, it slows down, while the other speeds up to correspond.

A tractor with two driving wheels must use a differential in order to make turns easily. Without a differential, the wheels would run always at equal speed, and in making a turn one would be obliged to slip.

The use of a differential has a disadvantage, however. If one wheel is in a mudhole and the other is on hard ground, the wheel in the mud meets with little resistance, and all of the power of the engine goes to it; it spins without moving the tractor, while the other wheel remains stationary. In such a case all of the power should be applied to the wheel that has traction in order to move the tractor, but this the differential fails to allow.

In some tractors the differential is so made that the parts may be locked together. This lock is used when one wheel is in a mud hole, and as by its use power is transmitted equally to both wheels, the tractor moves.

Great care must be taken to unlock the differential as soon as the need for the lock has passed, for otherwise the wheels would slip on a turn, and the parts of the transmission might be strained or broken.

A differential is usually made with two bevel gears placed face to face; between them is a frame holding three or more small bevel gears that are in mesh with them both. The engine revolves the frame with its small gears; each of the large bevel gears revolves a driving wheel.

When the tractor moves straight ahead the differential turns as if it were one solid piece. When there is less resistance to one driving wheel than to the other, the small bevel gears, in addition to revolving with

the frame that carries them, turn on their shafts. This transmits the power of the engine to one wheel more than the other, according to the resistance of the wheels.

Figure 64 shows one of the large bevel gears of a differential, with the three small

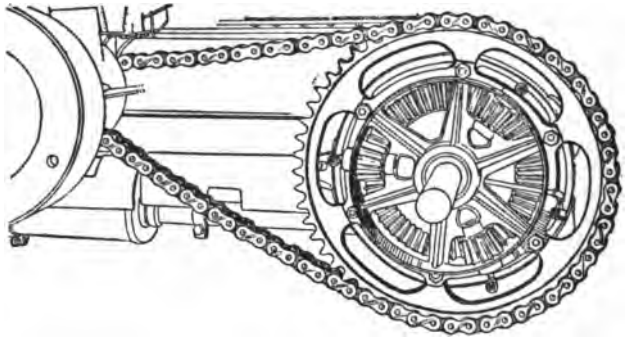

FIG. 64.—"I. H. C." CHAIN DRIVE, SHOWING THE DIFFERENTIAL

gears, the other large bevel gear being removed. A differential in section is shown in Figure 65.

A tractor with only one driving wheel has no differential. Such tractors usually have two wheels, but one of them runs loose on the axle, and serves only to support the tractor.

The rear axle construction of a tractor with a 1-wheel drive is shown in Figure 66, which should be compared with the 2-wheel rear construction shown in Figure 65.

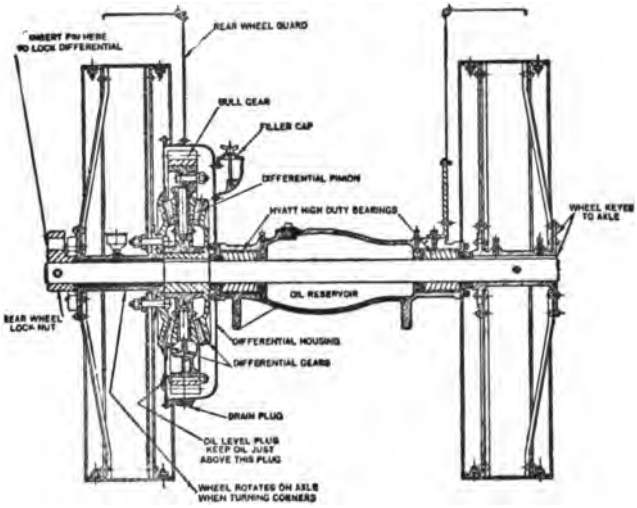

FIG. 65.—"CASE" REAR AXLE

There are a number of methods used for transmitting power to the driving wheels. In Figure 64 a chain is used; there are tractors with but one chain, and others with a chain for each driving wheel.

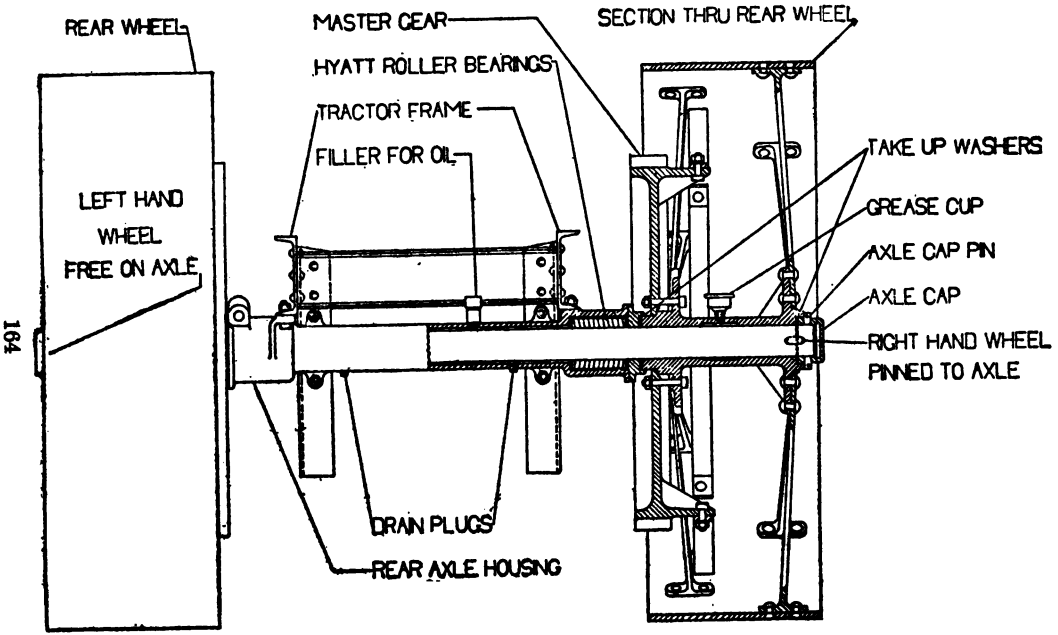

FIG. 66.—"OIL-PULL" REAR AXLE

The most usual method is by a *master gear*, or *bull gear*, which is a large and heavy gear attached to the driving wheel, as shown in Figures 65 and 66. In some tractors this gear is nearly the size of the wheel, and is

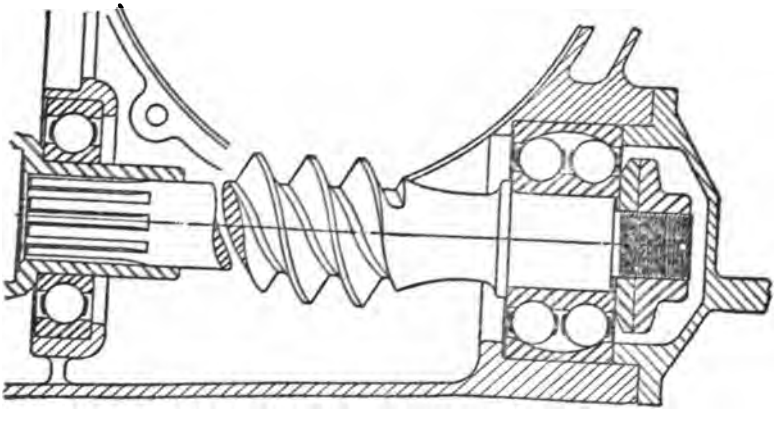

FIG. 67.—DRIVING WORM

fully exposed; in others it is smaller, and enclosed in an oil-tight housing.

The small gears that drive the bull gears are on the ends of the cross shaft, called the *jack shaft*, that carries the differential.

In the Fordson tractor the differential is

built into the axle, as it is in an automobile, and power is applied by a *worm*. The worm is driven by the change speed gear, and is a screw meshing with a gear on the differential, whose teeth are cut at the proper angle to make them fit the threads of the worm. A worm, which is shown in Figure 67, is always enclosed, and runs in oil.

CHAPTER IX

TRACTOR ARRANGEMENT

The uneven ground over which tractors must work requires the weight to be kept low, to prevent capsizing, and they are also built wide, for the narrower they are the more easily they tip over. They cannot be broad in front, however, for if they are the steering wheels cannot be swung enough to permit them to turn in the small circle that is desirable.

To give a small turning circle some tractors are built with the front of the frame raised enough to permit the wheels to cut under. Others use small steering wheels, but this is not desirable because small wheels will not run over rough ground as readily as large ones, and steering is difficult.

Types of tractors are indicated in Figures

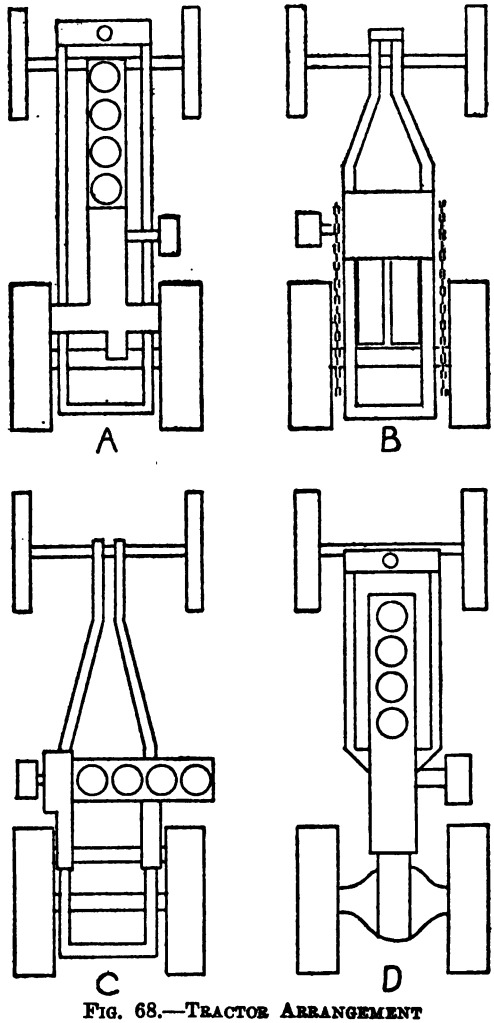

FIG. 68.—TRACTOR ARRANGEMENT

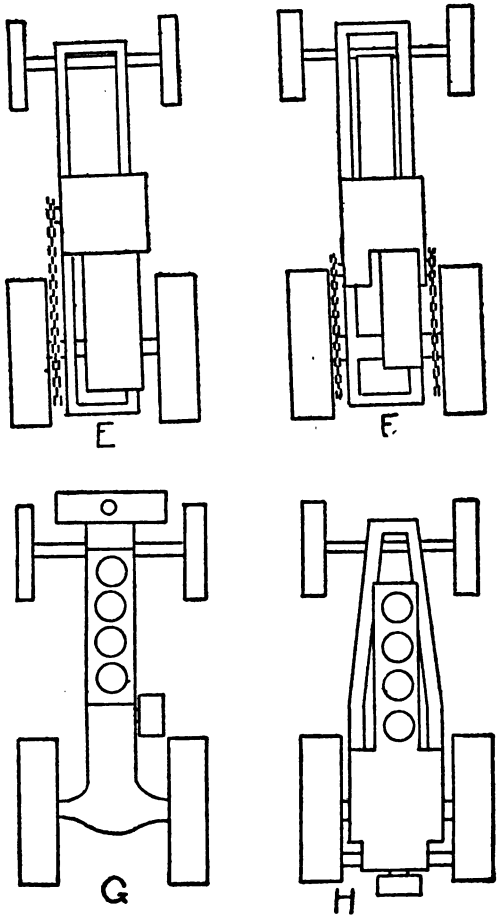

FIG. 69.—TRACTOR ARRANGEMENT

68 and 69. A has a 4-cylinder vertical engine in front, driving both wheels by bull gears, while B is a 2-cylinder horizontal engine in the center, driving both wheels by chains. C has a 4-cylinder vertical engine set across the frame. These three types have riveted steel frames, to which the parts are attached.

In D, the drive is entirely enclosed within the rear axle housing, and the rear part of the frame is formed by the axle housing and the housing of the change speed gear.

E has a 1-cylinder horizontal engine with a single chain drive, while F has a similar engine but drives to both wheels.

G has no frame, its place being taken by the crank case of the engine and the housings of the parts of the transmission. G and H have 4-cylinder vertical engines, G driving through an enclosed rear axle and H through bull gears.

Figure 70 has one broad wheel instead of two narrower ones, this being placed inside of the frame instead of outside. It has a 4-

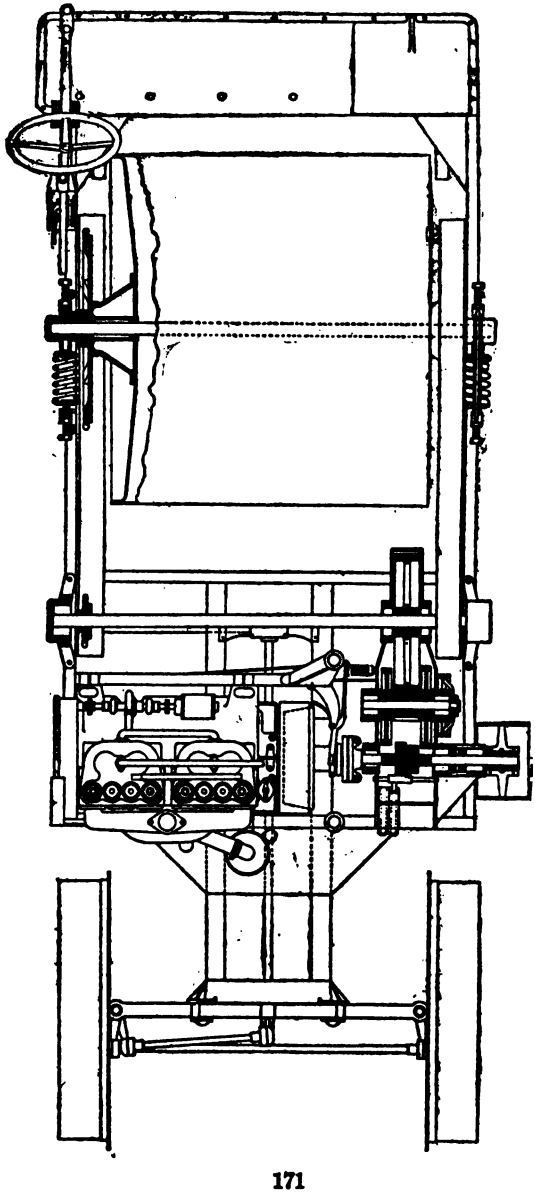

FIG. 70.—"GRAY" TRACTOR

cylinder vertical engine placed across the frame, and drives through two chains.

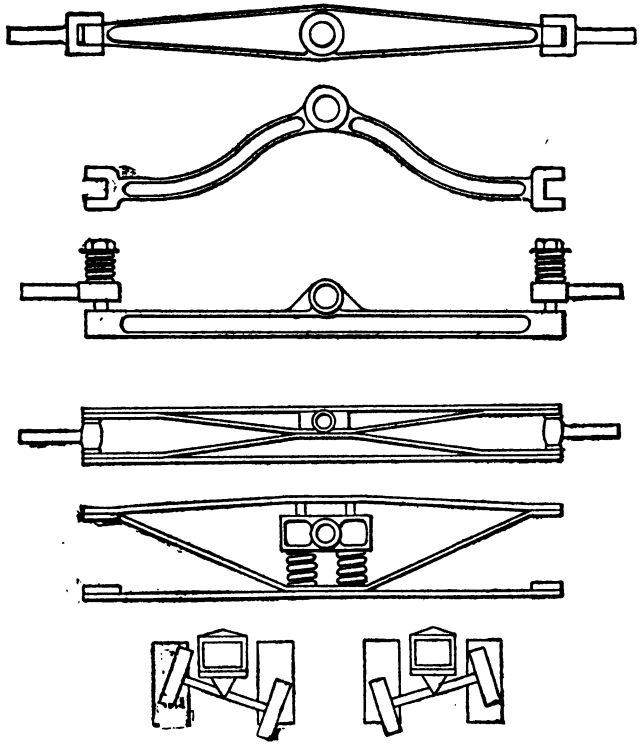

FIG. 71.—TYPES OF FRONT AXLES

The front axle of a tractor is almost always attached to the frame by a pivot, so that the

wheels will follow uneven ground. Some of the forms of front axles are shown in Figure 71.

The first is a plain bar, while the second is arched to raise the front of the frame in

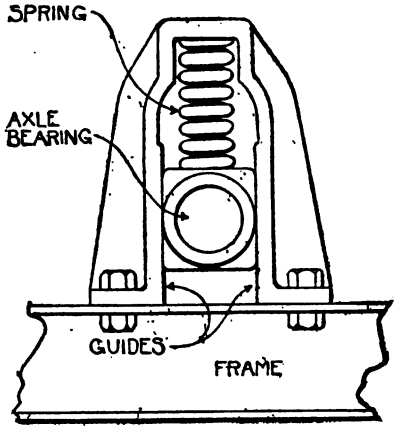

FIG. 72.—SPRING SUPPORT

order to permit the steering wheels to cut under. In the third the wheel axles are mounted on springs, which take up some of the vibration and act as shock absorbers.

The fourth axle shown is built of steel bars riveted together to form a truss, and the

fifth is similar, with the frame pivot carried on springs. The sketches at the bottom indicate the extent to which the pivoted front axle may swing.

Figure 72 shows a spring support for the axles, front and rear. The axle bearing is in a block sliding in guides, the weight being supported by a heavy spring.

CHAPTER X

LUBRICATION

THE most important thing in the care of a tractor is to oil it; every moving part should be lubricated, and the greatest care should be taken to assure a never-failing supply of oil and grease.

Carelessness in lubrication is the principal cause of tractor trouble. There is nothing complicated or difficult about keeping a tractor properly oiled; yet more tractors break down from careless lubrication than from any other cause. Every tractor-maker issues an oiling diagram and oiling instructions, and there is no excuse for an operator whose machine does not get the right kind of lubricant in the right quantity at each place where lubrication is necessary.

The cause of wear is friction; oil reduces

friction and so reduces wear. No matter how smooth and highly polished two pieces of steel may be, there will be friction between them if they are rubbed together, and they will wear each other. If they are oiled, the particles of oil will keep the pieces from touching each other, and there will be no wear.

Other substances than oil can be used; there are some kinds of machinery that are lubricated with water, for instance. For general use, however, oil and grease are the best, and are practically always used.

The object of a lubricant is to keep two pieces of metal from touching; it must therefore be able to get between them, and must stay there. If the pieces are large and heavy, there will be much greater pressure on the oil than if they are small and light, and the oil must be able to withstand this pressure and resist being squeezed out. The oil that would keep the small, light pieces apart might not be able to stand the pressure of

a greater weight, and might be squeezed out from between two heavy pieces.

Oil has a tendency to cling to whatever it touches, and thick oil or grease has more of this tendency than a thin, or "runny" oil. If a thick oil or grease is used on light machinery, such as a sewing machine, this clinging tendency would make the machine run hard, and might even prevent its operation.

When oil is heated, it becomes thinner, or more "runny." Through this, an oil used in a hot place might get so thin that it would not lubricate; and on the other hand, an oil that works all right in the heat of summer might get so thick on a cold winter day as to be useless.

A slow-moving part of a machine uses a thick oil or a grease; a thin oil must be used for a part that moves at high speed.

Some of the parts of a tractor move slowly and some at high speed; some are cool and some are hot. Different kinds of lubricants are therefore required, and it is a grave mis-

take to use a lubricant that is not suitable to the work that it is required to do.

The engine is the most difficult part of a tractor to lubricate, and the part that suffers most if the supply fails or if the wrong kind of lubricant is used. In the first place, it is so hot that any oil will burn, being turned to carbon; the best that can be expected of an oil is that it will resist burning until it has done its work of lubricating the piston and cylinder.

A tractor engine is more difficult to oil than an automobile or truck engine for the reason that it works harder and more steadily. An automobile engine is rarely driven to the limit of its power; it has frequent opportunities to cool when running down hill. A tractor engine, on the other hand, works at its full power all day long with no opportunities to cool off. An oil that gives good satisfaction on an automobile might ruin a tractor engine through its inability to withstand the greater heat.

The makers of tractors understand the importance of using proper oils, and recommend certain brands and grades; these recommendations should be followed in order to get the best possible results. All makers specify at least two kinds of lubricants, and most of them three; one specifies six, which range from a light sewing machine oil to a grease so thick that it is nearly solid. Whatever the recommendations may be, they should be followed.

In general, lubricants are classified according to their thickness, and they range from the light oil used for typewriters and sewing machines to grease so thick that it may be cut like butter. The thinnest oil is used for the circuit breaker pivot; this part is usually moved in one direction by a cam and in the other by a light spring. A thick oil would gum the bearing to such an extent that the spring might not be able to move the lever.

The oil used in an engine is thicker, and

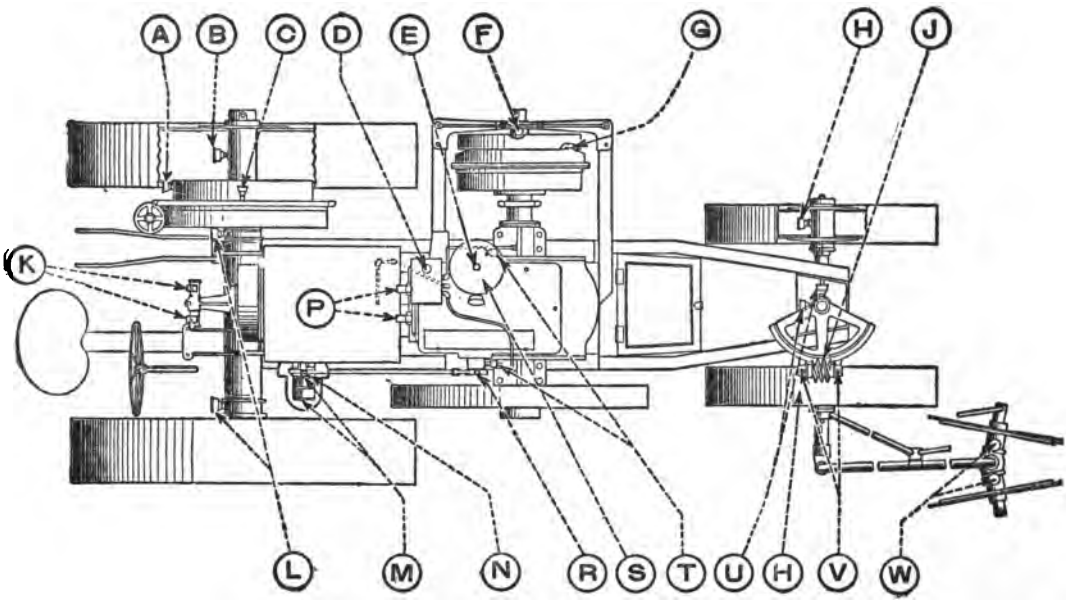

FIG. 73.—"MOGUL" OILING DIAGRAM

KEY	DESCRIPTION	QUANTITY	LUBRICATION
	ONCE EVERY HOUR		
L	Rear axle bearing	Two complete turns	Cup Grease
	ONCE EVERY TWO HOURS		
A	Differential hub	One complete turn	Cup Grease
B	Rear wheel hub	One complete turn	Cup Grease
C	Differential pinion	One complete turn	Cup Grease
H	Front wheel hub	Two complete turns	Cup Grease
T	Governor and camshaft bearing	Two complete turns	Cup Grease
	TWICE EVERY DAY		
E	Governor	Oil	Cylinder oil
F	Outboard bearing grease cups	Two complete turns when plowing	Cup Grease
G	Transmission	One pint	See note below
N	Magneto trip	Grease every 5 hours	Cup Grease
	Magneto roller and slide	Oil every 5 hours	Oil
J	Steering worm	Keep covered	Cup Grease
W	Steering hub grease cups	One complete turn	Cup Grease
V	Steering worm shaft	Oil every 5 hours	
R	Lubricator eccentric	Oil every 5 hours (keep wool in pocket)	
P	Cam roller slide	Oil every 5 hours	
K	Valve levers	Fill with oil every 5 hours (keep wool in pockets)	
	ONCE EVERY DAY TRACTOR IS IN USE		
U	Steering sector shaft	One complete turn	Cup Grease

D — **MECHANICAL LUBRICATOR**
Fill with a good grade of heavy gas engine cylinder oil. Turn the crank on the mechanical oiler 40 to 50 times when starting the engine.

IMPORTANT
In cool or cold weather the oil in lubricator tank must be warmed as it will not flow readily unless of the right temperature.

G — **TRANSMISSION**
In warm weather, use heavy oil such as "600" transmission or Polarine transmission oil; in cold weather, use a good light oil.

S — **GOVERNOR**
Cylinder oil in governor should cover shoe.

M — **MAGNETO**
Oil magneto bearings once a week with sewing machine or cream separator oil.

has a high *burning point* and high *viscosity;* that is, it should be able to resist burning, and should not get so thin when it is heated that it will be squeezed out of the bearings. The same kind of oil that is used in the engine can be used in many other parts of the tractor.

Grease is usually used for the gears of the transmission and drive. There is very great pressure between the teeth of two meshing gears, and only thick oil and grease have sufficient viscosity to resist being squeezed out.

The thickest grease is used on the tracks of caterpillar-type tractors.

Before operating a tractor, the lubrication chart supplied by the manufacturer should be studied with great care, and all of its requirements should be observed. This chart is usually in the form of a diagram accompanied by a table, as shown in Figure 73, which is the lubrication chart of one of the International Harvester tractors. This figure illustrates the constant attention that is

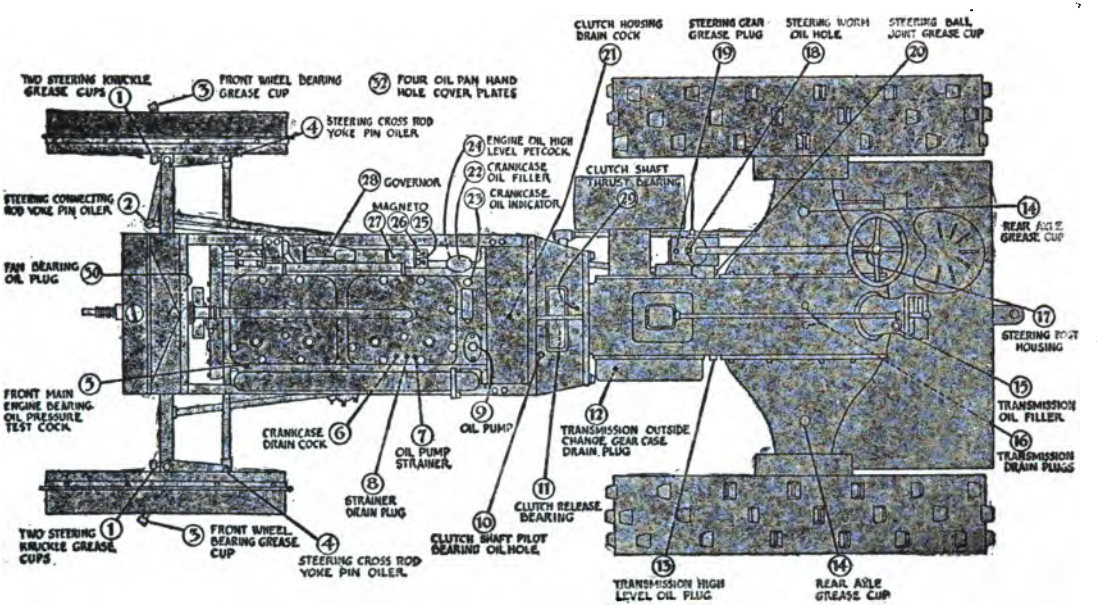

FIG. 74.—"ILLINOIS" OILING DIAGRAM

demanded by this most important part of tractor operation.

The table calls for four lubricants, these being sewing machine oil, which is very thin and liquid; gas engine cylinder oil; transmission oil, which is as thick as molasses; and cup grease, which is like butter.

The engine is oiled automatically, the only requirements being to keep the oil tank filled, and to be sure that the oiler is working. The other parts of the tractor are oiled or greased by hand.

Figure 74 is the oiling chart of the Illinois tractor.

There are three systems used for engine lubrication: *splash, force feed,* and by a mechanical oiler. In the splash system, a pool of oil is maintained in the crank case, of such a depth that the ends of the connecting rods just dip into it. They strike it with sufficient force to splash it to all parts of the crank case, the oil that strikes the pistons being

carried up into the cylinders and lubricating the walls.

The end of the connecting rod is often fitted with a dipper, as shown in Figure 75, to strike into the oil, as well as an oil catcher, shown in the same drawing, which is a little

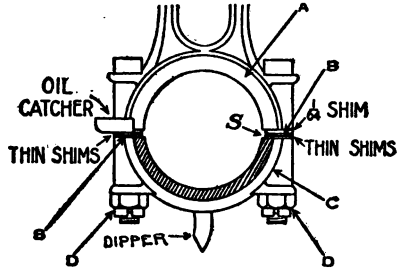

Fig. 75.—End of "Twin City" Connecting Rod

trough that catches the splashing oil and guides it to the connecting rod bearing.

To oil the wrist pin bearing there is an oil groove around the piston that collects oil from the cylinder walls; a hole connects this groove with the hollow wrist pin, from which other oil holes lead to the bearing. This is shown in Figure 76.

In the force feed system a pump driven by the engine forces oil through pipes and channels to all of the bearing surfaces. Oil collects in a pocket in the crank case, called the

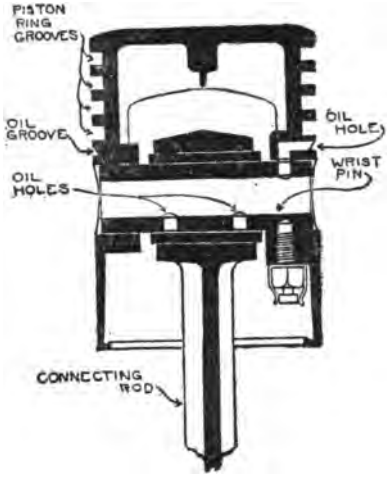

FIG. 76.—WRIST PIN LUBRICATION

sump, and is drawn from it by the pump. The sump is usually provided with a wire mesh strainer that separates out any dirt.

From the oil pump the oil is forced to the bearings by pipes and by holes drilled in the

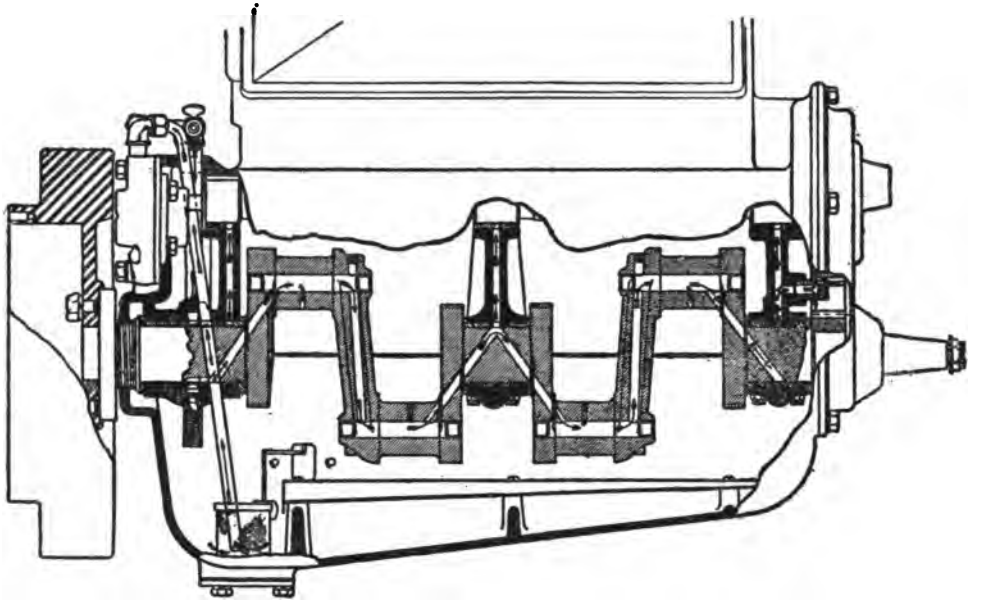

FIG. 77.—FORCE FEED OILING SYSTEM OF "GRAY" ENGINE

crank shaft and other parts, as shown in Figure 77.

An oil pump is illustrated in Figure 78. It consists of a plunger driven by the engine,

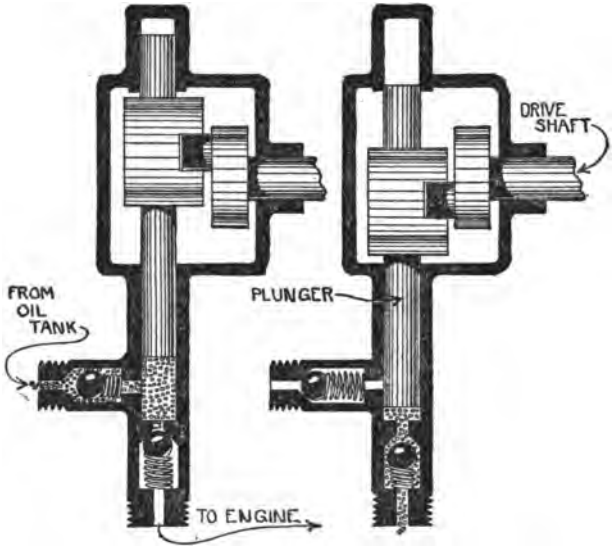

FIG. 78.—OIL PUMP

working in a cylinder provided with two ball check valves, one for inlet and the other for outlet. On an upward stroke of the plunger the cylinder fills with oil, which is forced to

the engine bearings by the following inward stroke.

Figure 79 shows a similar pump with a

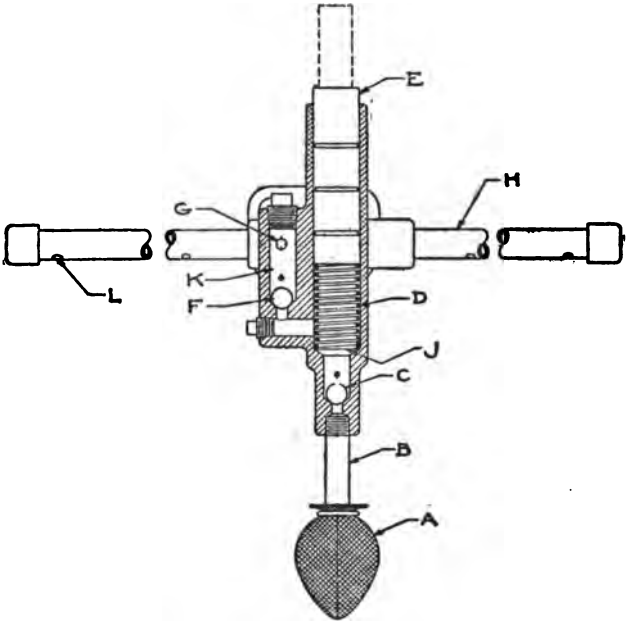

FIG. 79.—"E. B." OIL PUMP

strainer over the intake, the outlet being through the holes L in the pipe H. In the pump illustrated in Figure 80 the plunger is hollow, and fills with oil during an inward

stroke; the oil is forced out to a passage around the plunger, and passes to the bearings by the holes H.

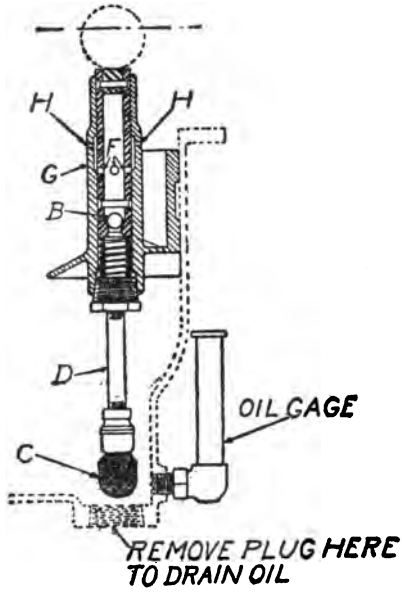

FIG. 80.—OIL PUMP WITH HOLLOW PLUNGER

Figure 81 shows two methods of preventing oil from leaking out around the plunger. In the first of these, a channel is formed in the upper part of the pump cylinder, leading

to the crank case; any oil that leaks past the plunger flows to the crank case by this drain pipe and is not wasted. In the second

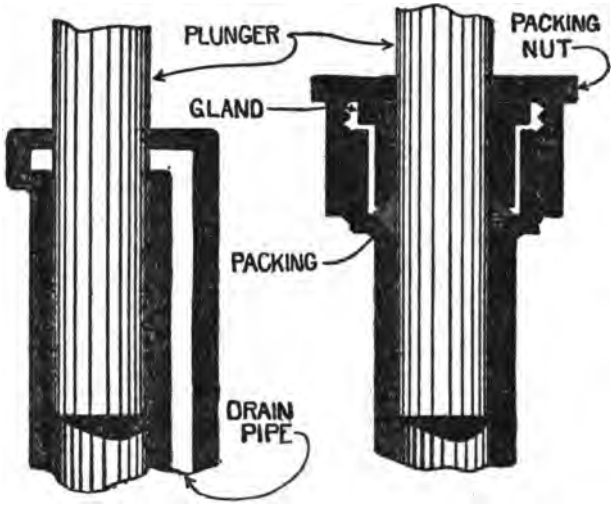

FIG. 81.—METHODS OF PREVENTING OIL LEAKS

method a packing of soft material, such as cotton or asbestos, is placed around the plunger, and is pressed against it by a *gland*, which is like a thick washer. A *packing nut* screws against the gland, and thus squeezes the packing against the plunger.

A *mechanical lubricator*, or *oiler*, consists of several small oil pumps placed in an oil tank, each pump feeding one special bearing, and all driven by the engine. Figure

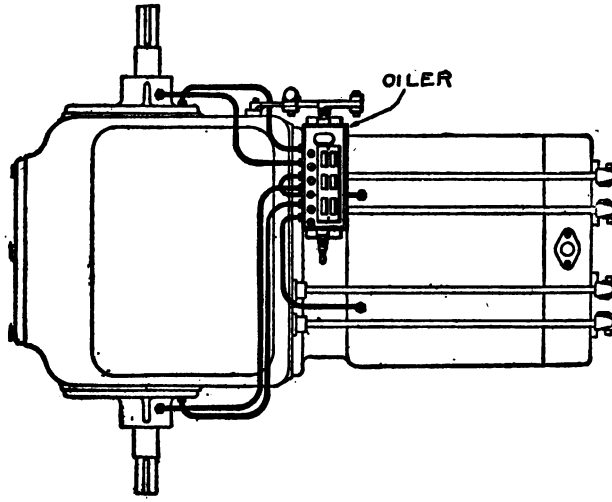

FIG. 82.—"TITAN" LUBRICATOR

82 is a top view of a 2-cylinder horizontal engine oiled by a six-feed oiler. The bearings that it oils are the two ends of the crank shaft, the two ends of the cam shaft, and the two cylinders; the gears and other bearings

are oiled by splash. An oiler is adjustable, so that it will feed any desired quantity of oil.

Figure 83 shows a side view and an end view of the crank shaft of a 2-cylinder horizontal engine. To each end of the crank is attached a ring, B, formed into a channel;

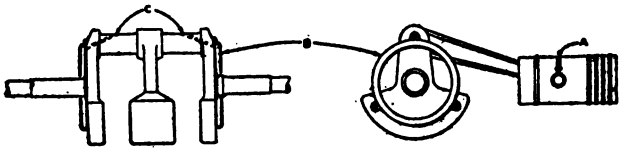

FIG. 83.—"I. H. C." METHOD OF OILING CRANK PINS

oil splashing into this ring is thrown into the channel by centrifugal force, and flows by holes, A, to the crank pin bearings.

The oil forced to the cylinders from the oiler, Figure 82, reaches the wrist pin by grooves and holes, A, Figure 83.

A 6-feed oiler is also shown in Figure 84.

Figure 85 is an *oil cup,* which is used to feed an individual bearing. It is a glass cup holding oil with an opening at the bottom

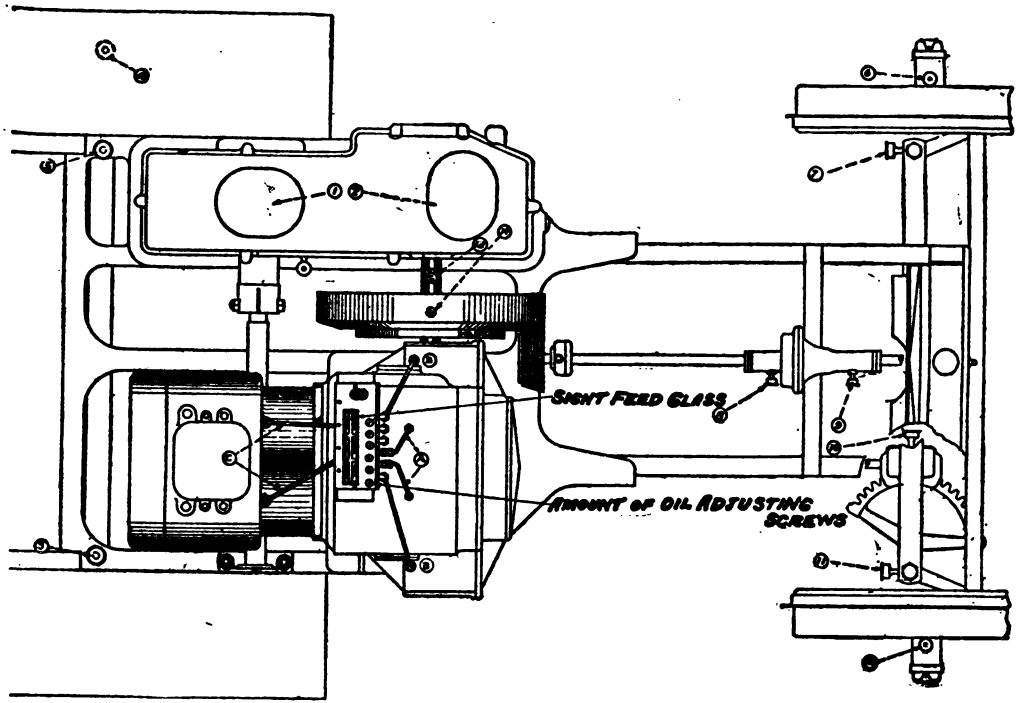

FIG. 84.—"HART-PARR" OILING SYSTEM

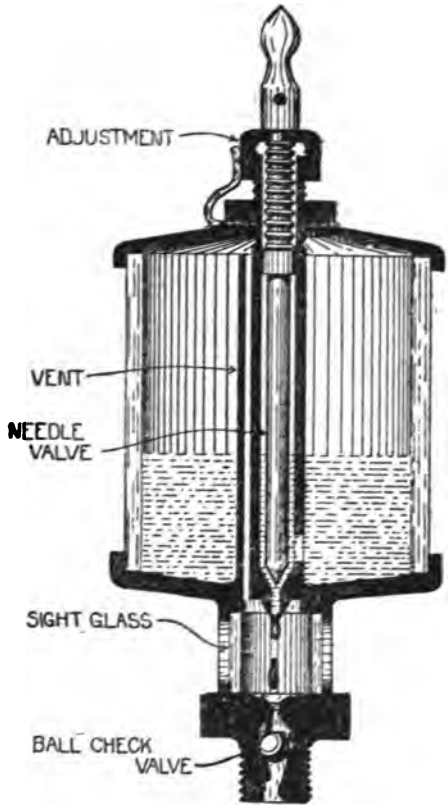

Fig. 85.—Oil Cup

into which fits a needle valve. When the engine is at rest, the needle valve handle at the top is turned down, which allows a

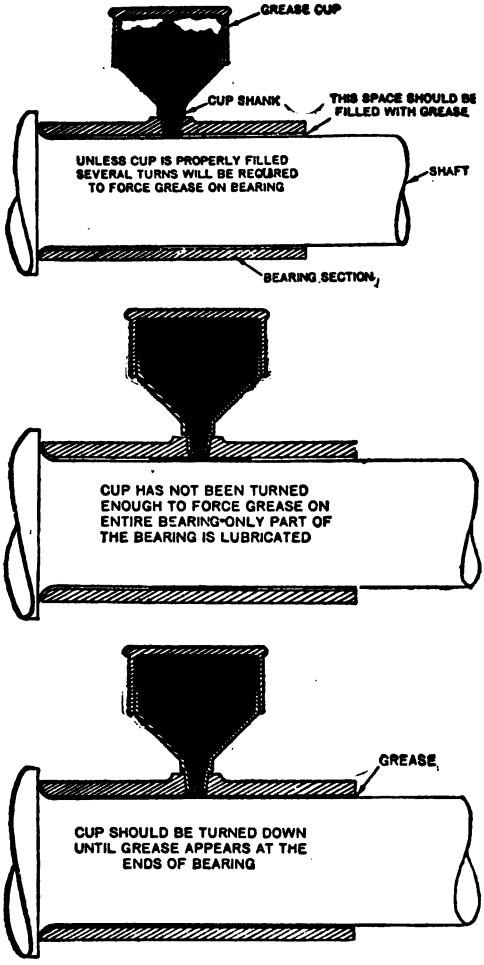

FIG. 86.—PROPER USE OF A GREASE CUP

spring to close the needle valve; on starting the engine the needle valve is raised, and the oil flows out by gravity. The dripping oil may be seen through a sight glass at the bottom.

In the force feed and oiler systems the oil feeds only when the engine is running, but with an oil cup the oil feeds all of the time that the needle valve is raised. Care must therefore be taken to turn on the oil cup when starting the engine, and to turn it off when the engine is stopped.

Change speed gears and differentials are usually enclosed in oil-tight housings that contain a supply of oil or grease. The only attention that is required is to see that they have the necessary amount, and that the lubricant is of the right kind.

The bearings of wheels and of many other parts of a tractor are lubricated with grease fed by *grease cups;* a grease cup has a cover that, when screwed down, forces the grease out of a hole in the bottom of the cup. In

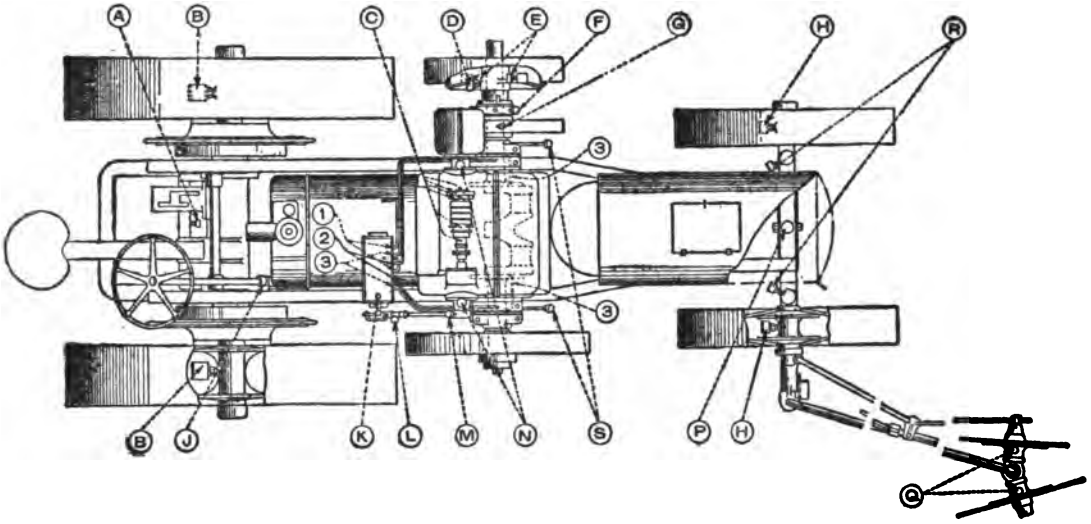

FIG. 87.—"TITAN" 10-20 OILING DIAGRAM

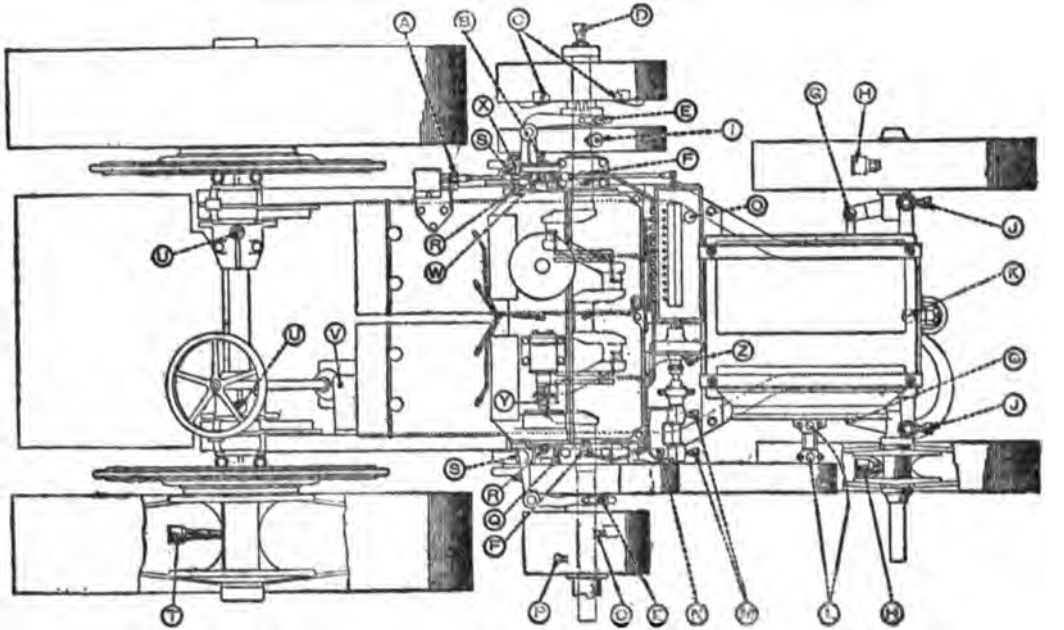

FIG. 88.—"INTERNATIONAL" OILING DIAGRAM

using a grease cup it is not sufficient simply to give the cover a turn or two; the cover should be screwed down enough to force an ample supply of grease to the bearing. This is illustrated in Figure 86.

Figures 87 and 88 are oiling diagrams. They show the many points at which a tractor must be lubricated, and it should be remembered that the failure to maintain a plentiful supply of lubricant at any one of these points will mean the wear and break-down of that particular part.

CHAPTER XI

TRACTOR OPERATION

Before running a new tractor it should be given a careful examination to make sure that all nuts and bolts are tight, and not secured only by paint; that all grease cups are in position and filled; that all parts of the mechanism are properly lubricated; that oil holes are free from grit, and that nothing is cracked, broken or missing. It should be cleaned of cinders and mud that may have collected in shipment, and in general it should be seen to be in proper condition.

A tractor, like any other piece of machinery, requires breaking in, and for the first few days it should be run slowly and with light loads. All parts should be plentifully oiled, for there will be rough and uneven places on the bearings that must be worn

smooth, and without oil these would heat and be injured.

A continual watch should be kept for loose nuts and bolts, which should be tightened without delay. Readjustments of the clutch and brake will be found necessary, for their linings when new may be lumpy; as these lumps wear down through use the clutch or brake will begin to slip and must be tightened. When the linings are worn in, this trouble will disappear, and readjustments will be necessary only at considerable intervals.

Special care should be taken to keep the filler caps of the fuel and oil tanks clean and free from dirt. If these are dirty, the dirt will be carried into the tank when filling, and will sooner or later cause trouble.

The vent holes in the filler caps should be kept clear. If they are plugged with dirt, air cannot enter the tank to take the place of the fuel that flows out, and the feed of fuel will stop.

Beginning when the tractor is new, a system of daily inspection should be started, and should be continued for the working season. Big trouble starts with small trouble, and if small trouble is cured without delay, big trouble will be avoided. Trouble usually begins with looseness, which may be due to a slack nut or bolt, or may come with wear. If the loose part is not tightened, it will begin to shift its position; it will wear, and will rapidly lead to a breakdown.

Every day, without fail, all parts of the tractor should be inspected for loose nuts, bolts, pipe and electrical connections, petcocks, drain plugs, steering connections, etc. This is also the time for wiping off the working parts, and cleaning mud and grit from rods, shafts, joints, and other places at which dirt could make its way into bearings.

The change speed gears of a tractor should not be shifted while in motion, this being one of the differences between a tractor and an automobile. In the sliding gear type of

change speed mechanism, the gears slide into mesh sideways, a tooth of one being opposite a space between two teeth of the other. If the gears are not in the right position for this, one tooth will strike another, and the gears cannot be meshed. In such a case the clutch is let in for a slight touch to move one gear, not for a dozen or twenty revolutions, but enough to bring a space between two teeth of one gear opposite a tooth of the other.

If an attempt is made to shift the gears while they are in motion, the result will be that one will grind against the other, and there will be rapid wear and probable breakage. It is because gears cannot be shifted while they are moving that manufacturers instruct users not to attempt to shift on a hill without first blocking the wheels. The reason for this is that the brakes may not hold the tractor, and if the gears are pulled out of mesh, the machine may start to run down hill; as another speed cannot then be

engaged because the gears are moving, there will be no control over the tractor.

Never coast down hill; always run with one of the speeds engaged. By switching off the ignition the motion of the tractor will drive the engine, and this provides the best possible brake. On low gear, the engine will turn in the neighborhood of eighty revolutions to one turn of the driving wheels, and the work required to do this will check the tractor on the steepest of practicable grades.

A tractor is not built for as accurate and delicate steering as an automobile and should always be slowed in making a turn; this is especially true when hauling plows or other loads in the field. It is difficult to control the tractor if a turn is made at high speed, and the machine is liable to tip over.

In steering and in engaging the clutch, the action should not be jerky and abrupt, but gradual and smooth. Letting in the clutch suddenly will start the tractor with a jerk that will strain it from end to end, and an

abrupt swing of the steering wheel will have the same effect. Making these motions smoothly and steadily will cause the tractor to change its direction or pace with the least possible strain and effort. This, of course, increases the tractor's life.

In much of the work done by the tractor, the varying conditions of field and soil make a continual change in the load, and the tractor must be handled accordingly. The change from an uphill to a downhill haul, and from sand or light loam to gumbo, will require the gears to be shifted in order that the engine may neither labor nor race in keeping the outfit at its work.

There should be no hesitation in coming down to low speed when the engine shows by its laboring that the effort of working on high gear is becoming too great. The engine cannot deliver its full power unless its speed is maintained, and low gear is provided for those times when the load is too great to be handled on high. Use high speed

whenever it is possible, but trying to force the tractor to run on high with too great a load will lead to a breakdown.

High speed should be used for light work or for moving from place to place, but the engine should never be run at a greater number of revolutions than that specified by the manufacturers. It is very poor policy to run the tractor fast over rough roads, as the pounding will inevitably injure it.

Cold weather changes conditions in the handling and operation of a tractor; there is difficulty in starting, lubrication is likely to be faulty, and there is danger of breakage in engine, radiator, and air washer through freezing.

Difficulty in starting comes from the use of the usual medium grade of gasoline, which is satisfactory in mild weather, but will not vaporize at low temperatures. Cold gasoline will not vaporize in a cold engine; to form a mixture it is necessary to use high test gasoline, which will vaporize at low tem-

peratures, or to warm the engine to a temperature at which medium grade gasoline will vaporize.

It is advisable to keep on hand a few gallons of high test gasoline to use in starting, or even a mixture of high test gasoline and ether, half-and-half, for extreme cold weather.

The engine may be warmed by pouring a bucket of hot water into the cooling system, cranking the engine to get it into the water jackets of the cylinders. Another plan is to wrap cloth around the intake manifold and carburetor, soaking it with hot water, being careful not to get water into the air intake.

A drop of liquid gasoline on the points of the spark plug will short-circuit them and prevent the formation of a spark; the points should be dry, and it is an advantage to heat the plugs, screwing them hot into the engine at the last moment before trying to start.

Kerosene is thicker when cold than when warm; it will not flow so freely, and the

needle valve of the carburetor must be opened more in winter than in summer to obtain a proper mixture.

Lubricating oil also thickens in cold weather, and flows much more sluggishly. The lubrication adjustments that are correct for summer will therefore be incorrect for winter. This may be provided for to a great extent by using a thinner oil in winter than the oil used in summer. A cold snap is likely to result in burned bearings if the change in lubrication that it brings is not allowed for.

Grease thickens in cold weather more than oil does, and some kinds freeze solid. In winter a light, soft grease should be used, and the grease cups should be turned down several more turns than is usual when the weather is warm.

While antifreezing compounds can be used in the cooling systems of automobiles, they are not suitable for tractors because the greater and more continuous heat quickly

evaporates them. The danger of freezing is very great, and must be avoided; the water in the radiator and jackets is in thin sheets, and will freeze when a bucket of water standing in the open will not show any signs of ice.

The only real protection against freezing is to drain out all the water whenever the tractor is to stand idle for a sufficient time for it to cool off. Petcocks are provided for this at the lowest points of the system, and also in the pump when forced circulation is used. The freezing of even a small pocket of water will be enough to crack a cast-iron water jacket wall, and the best assurance that the system is thoroughly drained is to open the drain cocks while the engine is still running, shutting down as the flow stops.

When putting up a tractor for the winter it should be thoroughly protected from rust and corrosion. The last time that the tanks are filled a quart of light oil should be added for every five gallons of gasoline or kero-

sene; as the tank empties this will leave a coating of oil on the inside walls.

Fuel tanks and water system should be drained, and particular care should be taken that all the water is out; the drain cocks should be left open. A mechanical oiler should be filled full, to protect the steel parts of the pumps from rust.

A half pint of thick oil should be put into each cylinder, and spread to the cylinder and piston walls by cranking for a few turns. Oil should be run between the valves and their seats.

All exterior parts should be protected by a coat of thick oil or by paint. The governor rod, push rods, and similar parts should be especially looked after. It is advisable to take off the magneto and store it in a safe, dry place; spark plugs should be left in position.

The tractor should be covered with a tarpaulin and stored in a tight shed.

When going over a tractor preparatory to

laying it up, a list should be made of all parts that need renewal. These parts should be procured at once; they are more readily obtained during the winter than in the operating season, and will be on hand for the spring overhaul.

CHAPTER XII

ENGINE MAINTENANCE

FUEL SYSTEM AND CARBURETOR

THE operation of a carburetor depends on so many things that no exact instructions for its adjustment can be given. The best that can be done is to give a general idea of the requirements, and to outline a plan by which the adjustment can be arrived at.

The many makes and designs of carburetors and vaporizers that are used on tractors have different kinds of adjustments; on most of them the only adjustment is the needle valve that controls the fuel, but some also have adjustable air valves. In any case, the manufacturer's instruction book should be studied for the understanding of the particular carburetor in question.

The first step in adjusting a carburetor is to get the engine running. The needle valve should be closed, and then opened enough to give a mixture on which the engine will start; on many carburetors this will be about one and one half turns. The engine should then be *primed;* that is, a little gasoline should be put in the cylinder, which may be done with a squirt can.

When the engine is running, and is well heated, the needle valve should be gradually closed until the engine begins to miss, and to send jets of flame out of the carburetor, or little explosions occur in the carburetor. These are signs of a thin mixture, and the needle valve should be gradually opened to make the mixture richer. The engine will run more steadily, and will pick up speed until the mixture becomes too rich, when it will choke and black smoke will come out of the exhaust.

The positions of the needle valve for a mixture that is too thin and one that is too

rich have thus been found, and it remains to set it at that point between at which the engine runs most steadily and at the best speed.

With adjustable air valves it is usual to adjust for idling, that is, the slowest speed at which the engine will run steadily without load, and then to make any necessary additional adjustment for full speed and power.

If a carburetor cannot be adjusted by following the usual methods, trouble may be looked for, and this may be in the carburetor itself, in the fuel supply, or in the intake manifold, taking for granted, of course, that the engine is in proper condition and that the ignition system is operating correctly.

Dirt under the float valve will prevent the valve from seating, and the level in the float chamber will be too high, so that the mixture is too rich. Lifting the valve from its seat will let fuel rush through, and loose particles will thus be washed away. If dirt is ground into the valve and seat, or if these parts are worn, the valve must be reseated,

which is done by turning the valve against its seat with light pressure, the end of the valve being gently tapped with a light hammer. Under no conditions use a grinding compound, for the particles would become imbedded in the soft metal and would ruin the valve.

Other causes of flooding are a bent valve, the sticking of the float pivot, and the soaking of fuel into the cork float, which is thereby made too heavy to float properly. The remedy is to dry it, and then to give it three coats of shellac.

A frequent cause of trouble is dirt in the pipe from the tank to the carburetor. While there may not be enough dirt to prevent the engine from running slowly, it is sufficient to prevent the flow of sufficient fuel for full power. A strainer is always provided, and this should be drained every day; if this is not done frequently, dirt will work its way through.

A grain of sand in the spray nozzle will

choke it, and every precaution should be taken to keep this from happening, as well as the other troubles that dirt brings. The best precaution is to strain the fuel through chamois leather, or, if this is not obtainable, through a very fine metal wire screen.

In fuel systems that use a pump, the sticking of the check valves, and the leaking of the pump through poor packing, will cut down the supply of fuel.

If air can leak into the carburetor or intake manifold, the proportions of the mixture will be altered. To test for leaks, run the engine, and with a squirt can squirt gasoline on the joints or other places that are suspected of leaking air. If there is a leak, the gasoline can be seen being sucked in.

Air must enter the tank to take the place of the fuel that flows out, and this is provided for by a small hole drilled in the tank-filling cap. If this hole becomes stopped up, the fuel will not flow, and the engine will come to a stop. There is a similar hole in

the top of the float bowl of most carburetors, and this also must be kept open.

An engine is always started on gasoline, for that will form a mixture when it is cold. Before switching to kerosene the engine must be hot, and this will take several minutes of running on gasoline.

With a double carburetor, which has a separate fuel bowl and spray nozzle for each fuel, nothing more is required than the switching of one or the other into action; when the two parts have once been adjusted, they require no further adjustment. Carburetors that use the same spray nozzle for both gasoline and kerosene will require a readjustment when the switch is made, for, as kerosene is thicker than gasoline, it will require a larger opening for a sufficient quantity to pass. This readjustment is a slight opening of the needle valve on switching to kerosene, and an equal closing when gasoline is again used.

A few minutes before the engine is stopped

the carburetor should be switched from kerosene to gasoline, so that when it is shut down the fuel bowl will contain gasoline and the cylinders gasoline mixture. This is done to make it possible to start the engine. If the engine is stopped on kerosene, it cannot be started if it has had time to cool. In such a case the fuel bowl must be drained of kerosene and filled with gasoline, and the engine must be cranked until the cylinders receive a clean gasoline mixture.

When an engine is working at full power on kerosene, it gets much hotter than would be the case with a gasoline mixture. Carbon particles in the cylinder, and projecting bits of metal, such as thin spark plug points or the edge of a screw thread, become so hot that they glow, with the result that they ignite the incoming fresh charge and cause preignition. The effect of this is to cause a pounding or knocking that is very noticeable. It is then necessary to use water, which is provided for in the carburetor.

Water has the effect of cooling the intensely heated parts, and only enough should be used to prevent preignition. When the knocking is heard, water should gradually be turned on, using no more than is necessary to stop the noise. Too much water will cause the engine to miss by collecting on the spark plug points, thereby preventing the passing of the ignition spark.

Hard water should not be used, for it will form scale, which will interfere with the action of the carburetor. Only soft water should be used, and preferably rain water.

Whenever the engine is stopped, the fuel valve at the tank should be closed to shut off the carburetor supply. If this is not done, the float valve will be the only thing that prevents the fuel from running out, and should the float valve leak, the fuel will be wasted.

MAGNETO AND IGNITION SYSTEM

A magneto that is kept clean and properly oiled rarely gives trouble, and it is a

mistake to blame it whenever the engine runs irregularly or will not start. Its adjustments should be changed only when the other parts of the engine have been proved to be in good condition.

The working parts of a magneto are enclosed, and practically proof against dust. It should be wiped off frequently, and dust and grit should not be allowed to collect around the oil holes, for otherwise it will work into the bearings and damage them.

Dust and dirt are especially injurious to the circuit breaker, which should be frequently inspected and cleaned. Very little oil should be used on it, and this should be the light oil used for typewriters and sewing machines. A thicker oil will become gummy, and will prevent the free action of the lever.

If there is much sparking at the platinum points, so that they become corroded and rough, it is an indication that the condenser of the magneto is not operating as it should, for the object of the condenser is to prevent

such sparking. The only remedy is to renew the condenser.

Rough points will spark more than smooth ones; should they get into this condition, they should be lightly filed with a file of the cut known as "dead smooth." If this file cannot be obtained, pinch a strip of the finest sand paper—not emery paper—between the points, and draw it gently back and forth, smoothing down first one point and then the other. In smoothing platinum points the greatest care should be taken to make them flat and true to each other.

After smoothing the points they should be readjusted so that when they are separated by the cam they are from 1/32 to 1/64 inch apart.

A distributor made with a carbon brush that slides across the contacts will require wiping off at least once a month. Carbon dust will rub off the brush and collect on the face of the distributor; in the course of time this will cause a short circuit. The distribu-

tor is always made so that it can easily be cleaned.

A magneto is timed to an engine so that when the spark control is fully retarded, the circuit breaker points are just separating as a piston goes over top center. The engine is cranked until one of the pistons is at top center; the magneto should be in position, but its coupling should be loose, so that the armature can be revolved. The spark control is retarded; that is, it is moved as far as possible in the direction in which the armature turns. The armature is then revolved in the direction in which it will be driven by the engine until it is seen that the contact points are beginning to separate; holding the armature, the coupling is then made fast.

It will now be found that the distributor brush is touching one of the contacts; that contact is to be connected with the spark plug of the cylinder that is at top center of the compression stroke. The following distributor contacts are connected to the remaining

spark plugs in the order in which their cylinders fire.

Should the magneto be suspected of being out of order, the first test is to disconnect a wire from its spark plug, and support the tip ⅛ inch from the metal of the engine while the engine is cranked briskly; if a spark appears, it is evidence that the magneto is operating and that the trouble is elsewhere.

If there is no spark, repeat the test with the switch wire disconnected from the magneto. This wire and the switch form a circuit from the metal of the engine to the insulated part of the circuit breaker; when the switch is closed, or in the "off" position, this circuit is completed, and as the magneto current flows over it instead of over the regular sparking circuit, no spark is produced at the plug. It sometimes happens that the switch or wire is defective, and allows the current to take that circuit even when the switch is in the open or "run" position. If this is the case it will be shown by a spark on cranking

the engine with the switch wire disconnected at the magneto, and no spark when it is connected.

If the switch and wire are all right, examine the circuit breaker to see whether the contact points are clean, and that they touch when the cam allows them to; touch the circuit breaker lever to see that it is free to move and that its spring is not broken. In some tractors the magneto is in such a position that the circuit breaker cannot easily be seen; in such a case hold a small mirror in front of the circuit breaker and examine the reflection.

If the circuit breaker is in good condition, examine the distributor to see whether it is dirty, or the brush broken; if these parts are all right, the trouble is of such a character as requires the magneto to be returned for repair.

Ignition trouble is usually in the spark plugs. The insulator cracks easily in many makes, which will permit the current to leak

across without forming a spark; it is frequently the case that the crack does not show, and the best test is to replace the suspected plug with a plug that is known to be good. If the cylinder fires with one plug and not with the other, there is no question as to the cause of the trouble.

The insulator of the plug must be kept clean, for a deposit of carbon on it will form a path by which the current can pass without forming a spark. A dirty plug can best be cleaned by brushing it with a stiff toothbrush dipped in gasoline. A carbon deposit can be softened by soaking the plug in gasoline for a few hours, and can then be brushed off more easily.

The spark gap of a plug should be from 1/32 to 1/64 inch. After considerable use the points will be burned off, and the gap will become too wide; the points should then be bent to form a proper gap.

Oil and grease will rot rubber, and the ignition wires should therefore be wiped clean.

Oil-soaked cables will give trouble, and should be replaced with new ones.

It is frequently difficult to locate a leakage of current. If the engine is misfiring and losing power, and a leakage of current through poor insulation is suspected, the easiest way to detect it is to run the engine in the dark. Leaks will show themselves by sparks, which are then easily seen.

COMPRESSION

In order to deliver its full power a gas engine must have good compression, and compression should frequently be tested by cranking the engine slowly and steadily with the ignition switched off. If compression is good, there will be a springy, elastic resistance that becomes greater as a piston approaches the end of a compression stroke, and that throws the piston outward as dead center is passed. Compression should be the same for all cylinders.

If there is a leakage of compression, the

only resistance will be from the bearings, and it will be the same for all parts of the stroke.

A compression leak often makes a hissing noise that can be distinctly heard, and by which it can be located, but more often it makes no sound, and its location must be found by testing. The leak may be at any of the openings into the combustion space; at the valves, around the spark plugs or piston rings, or at the cylinder head gasket.

To discover whether the gasket leaks, run gasoline along the line of the gasket joint with a squirt can while the engine is being cranked briskly; at a leaky place it will be sucked in or blown out. The same test should be made around the spark plug.

The remedy is to reset the cylinder head, using a new gasket, and being sure that the surfaces are clean and free from grit.

Piston ring leaks are usually caused by the rings sticking in their grooves through the formation of carbon. To test for piston

ring leaks, pour a half pint of cylinder oil into each cylinder, and crank the engine slowly. The oil will form a seal around the pistons, and if compression is then improved, the rings are shown to be at fault.

To free the rings, pour a few tablespoonfuls of kerosene into each cylinder, and spread it by giving the engine a few turns; after standing for an hour or so the carbon should be sufficiently softened to free the rings.

If the leakage of compression is due to the rings being worn and loose in their grooves, they must be replaced.

The most usual cause of compression loss is leaking valves. With its continual pounding against its seat, and the heat to which it is exposed, a valve and its seat will become rough and pitted, and will leak; when in this condition the valve must be ground.

A valve is ground by spreading grinding compound on the seat, and turning the valve against it. This requires the valve spring

to be taken off; the exact method of doing this depends on how these parts are made.

If the valves are in a removable cylinder head, valve grinding is most easily done by taking the cylinder head to a bench. In many designs the valve seats are part of the cylinder casting, and the job is done on the tractor.

In grinding a valve the valve is not turned around in one direction only, for this would cut grooves in the valve and seat. To obtain smooth surfaces the valve should be given part of a turn in one direction, and then turned equally in the other direction; after every few turns the valve should be lifted and dropped to another position on the seat. In this way the grinding is made even all around.

The best tool for valve grinding is a carpenter's brace with a screw driver blade fitting the slot in the valve, as shown in Figure 89. This drawing illustrates a cylinder with a fixed head; the valve is reached by unscrewing the plug from the opening directly

above it. When grinding valves in an engine of this design the opening between the

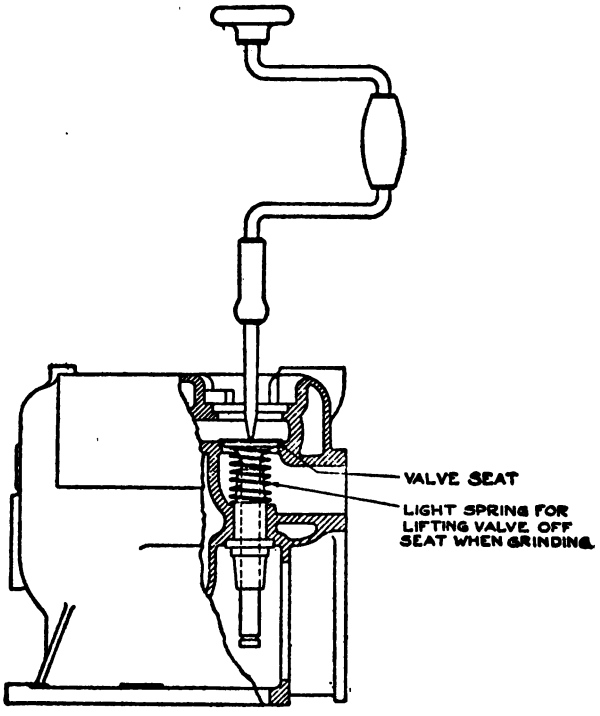

FIG. 89.—GRINDING VALVE IN ENGINE WITH FIXED HEAD

valve pocket and the combustion space should be plugged with a rag or waste to prevent

the grinding compound from getting into the cylinder.

With the valve-grinding tool in position, swing the handle back and forth ten or twelve times; then lift the valve, place it in a new position, and repeat. The valve is lifted most easily by a light spring placed under the valve disk, as shown in Figure 89.

From time to time the valve disk and seat should be cleaned off and examined to see whether they are smooth and free from pits and scores. If they appear to be, make marks around the valve disk with a lead pencil, replace the valve, and give it a complete turn. If this wipes off the pencil marks all around the valve, the grinding is complete, and the valve may be replaced with its spring and spring retainer. It is not necessary to grind until the entire thickness of the valve disk and seat are smooth; a narrow band all around will make the valve tight.

After grinding, and before replacing the valve, all traces of the grinding compound

should be wiped off, and great care taken that none of it gets into the cylinder, valve stem guide, or other working part.

On an engine with a removable head containing the valves, the head may be taken to a work bench, which makes grinding easier.

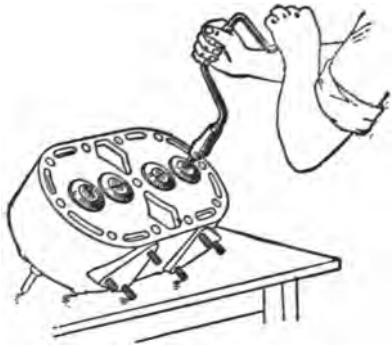

FIG. 90.—GRINDING VALVE IN DETACHABLE HEAD

This is illustrated in Figure 90. On an engine in which the valve and its seat may be taken out, the seat may be clamped in a vise, as shown in Figure 91. With valves of either of these types, the grinding may be tested by turning the head or the seat so that the disk is down, and pouring in gasoline. If

the valve is not tight, the gasoline will leak through, and grinding must be continued.

When a valve seat is very badly worn it must be redressed, which is done with a cutting tool to be obtained from the maker of the tractor, and illustrated in Figure 92. This has a stem fitting the valve stem guide which

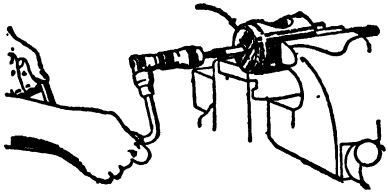

FIG. 91.—GRINDING VALVE IN DETACHABLE SEAT

centers the tool and assures a true cut. If a seat is so worn as to need redressing, the valve will be in such bad condition that it must be discarded and a new one used. This must be ground in before the engine is run.

Grinding a valve lowers it in its seat, and usually makes it necessary to readjust the push rod. When an engine is cold there is a space of about 1/32 inch somewhere between

the cam and the valve stem; in Figure 93, this space is shown to be between the valve stem

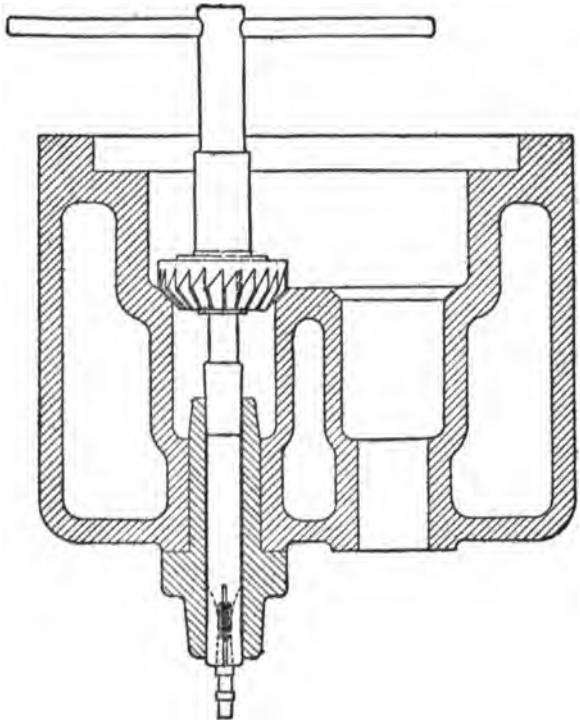

FIG. 92.—VALVE SEAT CUTTER

and the rocker arm. As the engine heats up the valve stem lengthens, and this space permits it to do so.

If the space is too small, the stem will come against the rocker arm or the push rod, and the valve will be held off its seat, causing a compression leak. If the space is too great, the valve will open too late and close too early. The space must therefore be carefully adjusted, and this is arranged for on practically all makes of tractor engines.

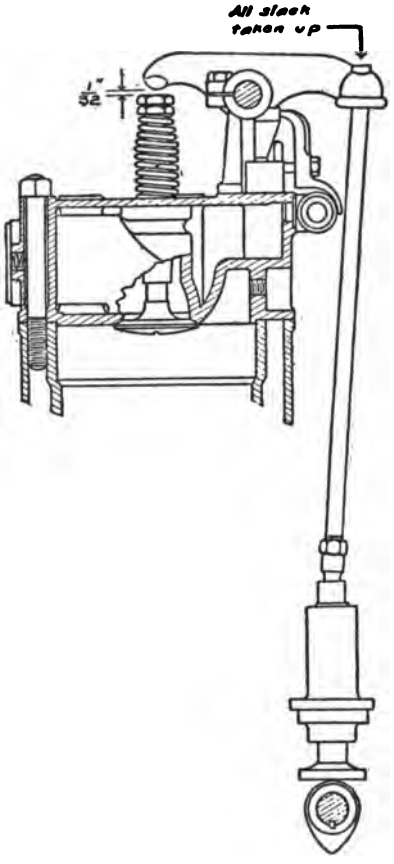

FIG. 93.—"HOLT" VALVE ARRANGEMENT

One-thirty-second of an inch is the

thickness of a 10-cent piece; it should just be possible to slip a slightly worn dime into the space when the engine is cold.

VALVE TIMING

By *timing the valves* is meant the setting of the cam shaft in such a position that the valves are opened at the correct point in the stroke. It is necessary to time the valves only when the cam shaft has been taken out and must be replaced. The principle of valve timing should be understood, however, in order to be able to tell whether an engine is timed correctly.

It will usually be found that the face of the flywheel bears letters and figures that are indicators of the timing of the valves. This arrangement on the E-B engines is shown in Figure 94. Two lines are cut in the face of the flywheel, one marked ex. cl. 1-4, which means exhaust valve closes, cylinders 1 and 4, and the other marked CENTER 1-4, to indicate that the pistons in those cylinders are on cen-

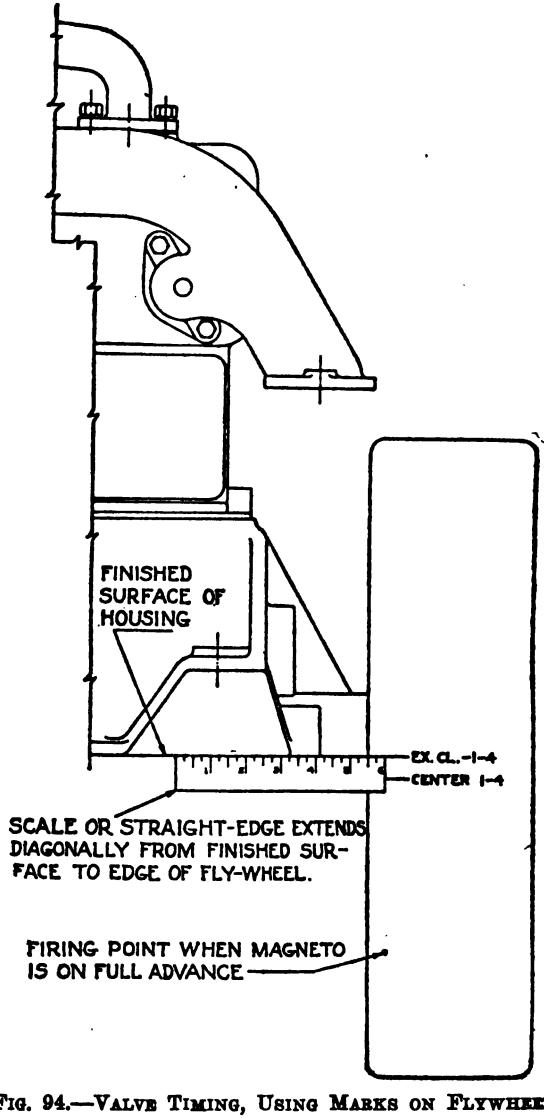

FIG. 94.—VALVE TIMING, USING MARKS ON FLYWHEEL

ter. A straight-edge is held against the finished surface of the housing and the crank shaft is turned to bring one of the marks in

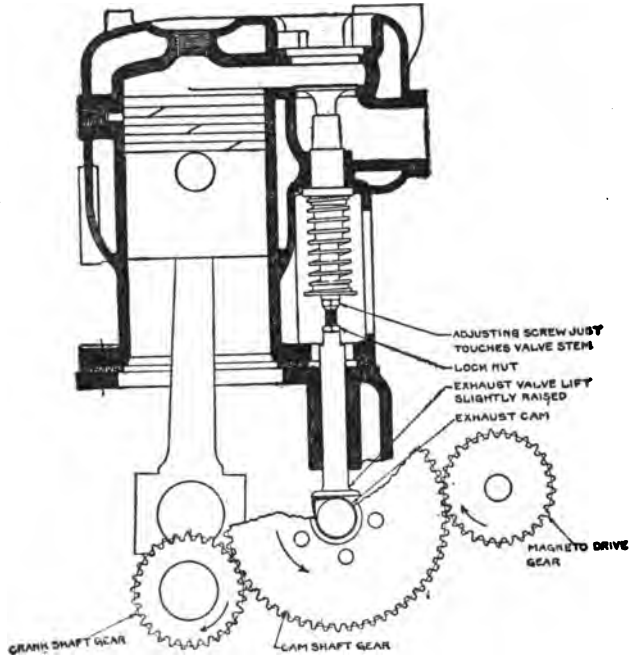

FIG. 95.—VALVE TIMING

line with it; at that point the valves or pistons are as indicated by the lettering.

The flywheel is also marked with a dot to

indicate the firing point. When the dot is in line with the straight-edge, ignition should occur with the spark control fully advanced.

Figure 95 shows the valve arrangement of the same engine, with the exhaust valve just closing; the point of the cam has passed under the lifter or push rod, and has permitted the valve to come to its seat, but is still holding the lifter against the valve stem.

To check the valve setting, hold a slip of tissue paper, such as a cigarette paper, in the space between the lifter and the valve stem, while the engine is cranked slowly. While the cam is holding the valve off its seat the paper will be pinched between the lifter and the valve stem and held firmly. At the instant when the paper is freed and can be moved, the valve is seated and the point of the cam is just passing from under; the proper mark on the flywheel should then be in line with the straight-edge.

As the cams for all valves are in one piece

with the cam shaft, setting one valve sets them all and checking the setting of one checks the setting of all.

Before taking out a cam shaft, two adjoining teeth of its gear should be marked with a prick punch or a small cold chisel, and a similar mark should be made on the tooth of the crank shaft gear that comes between them. In replacing the cam shaft it is then necessary only to return the teeth to the same position. Timing gears are usually marked in this way by the manufacturers.

CARBON

A kerosene lamp that is turned too high gives a dense black smoke that is composed of fine particles of carbon. A piece of paper held in the smoke is quickly covered with a deposit of carbon, commonly called soot, or lamp-black.

All fuel oils and lubricating oils contain carbon. When these oils burn in the cylinder, they produce carbon, much of which

[illegible]

[illegible]

[illegible]

[illegible]

[illegible]

softened by kerosene, it can be removed by scraping. This requires the cylinder head to be taken off, when the deposit can be scraped and chipped with a screwdriver. Care should be taken to keep the carbon crumbs from getting into the cylinders, valve stem guides, or other places where it would cause wear.

In taking off the cylinder head the gasket should be handled carefully, and protected from denting and bending. A battered or bent gasket is a sure cause of compression leaks. In replacing a metal gasket, give it a coat of cylinder oil on both sides to improve its seating.

When replacing the cylinder head, set all of the bolts up a little at a time, instead of screwing some of them tight while others are loose. One bolt drawn tight may tilt the cylinder head slightly, and there will be a distortion when another bolt is tightened. This is avoided by setting up all of the bolts a little at a time.

Running on too rich a mixture, giving the

engine too much oil, and not using an air cleaner in dusty work will carbonize an engine rapidly. Blue smoke at the exhaust is a sign that too much lubricating oil is being used; black smoke indicates too rich a mixture. Carbonizing can be greatly reduced by careful adjustment of the lubricator and carburetor.

CHAPTER XIII

LOCATING TROUBLE

THERE are many ways in which an engine can give trouble, but these are not serious to an operator who understands the action of an engine, and who works with his brain as well as with his hands. Each of these troubles has a distinct cause; proper care will avoid them, but if they come the reasons for them can be determined by simple tests.

In order to develop full power, an engine must be in good mechanical condition; that is, the bearings must be free without being loose, the gears must run well, the pistons and their rings must not bind or be too free, and so on. It must be properly lubricated and cooled, compression must be correct, it must get a good mixture, and ignition must take place at the right time. If an engine

gives trouble, it is because one of these systems is not working properly, and it is not at all difficult to locate the cause and to correct it.

If an engine gets a good mixture, which is ignited properly, it will run; if it will not give any explosions it is because one or the other of these systems is not working properly. An inspection or a simple test will show which one is at fault.

ENGINE WILL NOT START

If an engine will not start after being cranked a dozen or twenty times, it is useless to continue to crank it. It is not getting either a proper mixture or an ignition spark, and it saves time and energy to find out where the trouble is, rather than to keep on cranking in the hope that something may happen.

When a tractor engine refuses to start, the trouble is usually with the mixture, and, more often than not, this is due to carelessness or

to forgetfulness. The tank may be empty, or the fuel valve may be closed, so that the carburetor is dry; see if there is fuel in the carburetor bowl. The engine may have been shut down while running on kerosene, instead of having been switched to gasoline for the last few minutes of its run, so that the carburetor, intake manifold and cylinders contain kerosene, which will not vaporize without heat, instead of gasoline, which will. In this case the engine must be primed with gasoline.

If too much gasoline has been used for priming, the cylinders may contain a mixture that is too rich to ignite; the engine should then be cranked briskly with the fuel shut off and the compression relief cocks open, to clear out the rich mixture and fill the cylinders with air.

Water in the fuel will make starting difficult or impossible. It is easy to forget to shut off the water valve of the carburetor when stopping the engine, and when starting, water from this valve will prevent the forming of a

mixture and will also interfere with the ignition.

If the mixture is apparently all right, the fault may be in the ignition. A drop of liquid fuel or of water, for instance, may be on the spark plug points; this will short-circuit them and no spark will be formed, although the sparking current is passing.

If there is a suspicion that the ignition system is at fault, and that the magneto is not producing a sparking current, it should be tested, as explained in Chapter XII.

Starting in cold weather is always more difficult than starting when it is warm. Helps in cold weather starting are given in Chapter XI.

A leaky inlet manifold will admit an extra amount of air that will completely alter the proportions of a mixture. Thus the mixture will be wrong, although the carburetor adjustment seems to be correct. Manifold leaks are usually at the joints, but occasionally a

manifold is found with a hole in it due to poor casting or material, or a crack may develop.

Difficulty in starting due to poor compression caused by stuck valves or rings will show its cause by the ease with which the engine can be cranked.

If an engine is free enough to turn over, poor lubrication or cooling will not interfere with starting it. Faults in these systems show themselves only when an engine is running.

ENGINE LOSES POWER

An engine will lose power through a defect of compression, carburetion, ignition, cooling or lubrication, or because of a mechanical fault.

If the trouble comes from cooling or lubrication, the engine will overheat and thus make the cause known. A bearing that binds will become very hot, while if the cooling system fails, the engine will be hot all over. When the engine is excessively hot, the pistons will expand, and much of the power of

the engine will be used up in forcing them to move.

An engine that is not hotter than usual, and is having regular and even explosions, probably loses power through a loss of compression. This is the most usual cause of this trouble, and it is located and remedied as explained in Chapter XII.

If compression is good, the loss of power may be due to a clogged muffler or exhaust pipe, which will not permit the free escape of the burned gases. This condition will prevent full charges of fresh mixture from entering the cylinders, and the engine then cannot be expected to deliver full power.

Another possible cause of a loss of power with the engine apparently in proper condition is the sticking or poor adjustment of the governor. The factory adjustment of the governor should not be changed, however, until it is definitely proved that that is where the trouble lies.

If the engine misses fire, or runs irregu-

larly, the loss of power will be due to faulty carburetion or ignition. The mixture may be too rich or too lean; in either case the trouble will be remedied by readjusting the carburetor. A mixture that is very much too lean will make itself known by *backfiring;* there will be little explosions at the carburetor. This should be remedied at once, for the danger of fire from it is very great. Black smoke at the exhaust is a sign of a mixture that is too rich.

An engine will not deliver full power if it is run on a retarded spark. A loss of power from this cause will be accompanied by general overheating of the engine.

ENGINE STOPS

The manner in which an engine stops will indicate the reason for it.

A failure of the ignition system that stops the formation of current, like the sticking of the circuit breaker lever, will cut off all explosions instantly; the engine will stop ab-

ruptly. An engine will not stop abruptly from any fault with the mixture; with mixture trouble the explosions will become weaker and weaker until they cease.

If an engine stops through a failure of the lubrication or cooling systems it will be intensely hot, which will not be the case if the fault is with carburetion or ignition.

A running engine will not be brought to a stop by a loss of compression.

ENGINE MISSES

A steady or irregular miss in one cylinder is usually due to the spark plug's being cracked or dirty. Carburetor trouble will affect all the cylinders; it cannot affect one cylinder only, and missing in one cylinder may be put down as ignition trouble. In this case ignition trouble does not mean magneto trouble, for if the magneto produces sparking current for one cylinder it will produce it for all. Therefore ignition trouble in only one cylinder is in those parts of the ignition

system supplying that cylinder; that is, in the spark plug or in the spark plug cable.

A less likely cause for missing in one cylinder only is poor compression. It is usually the case that if compression is poor in one cylinder it is poor in them all, but a broken valve or piston ring or a weak valve spring will weaken compression in one and not in the others.

A cylinder that misses is cooler than the others, and can be located by feeling. It can also be located by short-circuiting the spark plugs one at a time; this will make no difference in the dead cylinder, but when the spark plug of an active cylinder is short-circuited the speed of the engine will drop.

To short-circuit a spark plug, take a wooden-handled screwdriver or other tool and rest the blade on the engine near the spark plug; then tilt until its shank is close to the spark plug terminal. The spark current will then pass to the metal of the engine by way of the tool instead of by the spark plug

points. This is also a test of ignition, for a spark will pass between the terminal and the tool.

Irregular missing in all cylinders may be due to a fault at one of the parts of the ignition system that supplies them all; a dirty distributor, for instance, or a sticking circuit breaker lever, or rough platinum points. It may also be due to a clogged fuel line, which prevents the carburetor from getting a regular and sufficient flow.

Irregular missing will also be caused by loose ignition connections, and by loose switch parts.

ENGINE STARTS; BUT STOPS

When an engine starts readily but quickly slows down and stops, the reason is almost always an insufficient supply of fuel. An obstruction in the pipe may prevent the fuel from flowing fast enough to keep the carburetor bowl filled when the engine is running; when the engine starts, the fuel is sucked out

of the spray nozzle faster than it comes in through the float valve, so the carburetor is soon drained and the engine stops. The bowl then fills, only to be sucked dry again when the engine is next started.

This difficulty is caused by dirt in the fuel, which collects in the strainer or the fuel pipe. The strainer is so arranged that it may be easily drained and cleaned; to clear out the pipe, shut off the fuel at the tank, disconnect the pipe at both ends, and blow through it.

The strainer should be drained every day; it is sufficient to open the strainer drain cock for two or three seconds.

Most of the troubles due to dirt in the fuel will be avoided if the fuel is strained when filling the tank.

Another thing that will bring an engine to a stop is the clogging of the vent holes in the tank filler cap and in the top of the carburetor bowl. These holes should be clear, so that air can enter to replace the fuel that

is used; if air cannot enter the fuel will not flow, and the tank is then said to be *air-bound*.

ENGINE OVERHEATS

An engine may overheat either because it produces more heat than the cooling system can take care of, or because the cooling system is not taking off all of the heat that it should.

Running an engine with the spark retarded will cause it to overheat; so will a failure of the lubrication and an obstruction to the passage of the exhaust gases.

If an engine has been taken down and overheats when it is reassembled, it may be that the magneto has been wrongly timed, and produces its spark too late. If an engine has been running properly but begins to overheat, the ignition cause will be the faulty setting of the spark control, or the slipping of the spark control rod.

When an engine is run on kerosene, the oil in the crankcase must be frequently

drained off and replaced with fresh oil. The reason for this is that part of the kerosene that goes to the cylinders does not vaporize and burn, but works its way past the pistons and into the crankcase, where it thins the lubricating oil. As the oil thins, it loses its ability to lubricate, and the engine begins to overheat.

Anything that produces extra friction will cause overheating, as, for example, a wrist pin that works endways and rubs against the cylinder wall, or a tight bearing.

For a cooling system to work properly it must contain a full supply of water, the passages must be clear, sufficient air must pass through the radiator, and the pump must be in proper condition.

Hose connections will rot, and a strip of rubber may peel off the inside and be drawn across the passage; or if dirty water is used, the dirt may choke the fine radiator passages or other channels. If the radiator is covered

with mud, air cannot get at the tubes to take the heat from the water that they contain.

A very usual cause of overheating is a slipping fan belt; an adjustment is provided by which the belt can be tightened when it works loose.

ENGINE SMOKES

Black smoke indicates that the mixture is too rich; blue smoke is a sign of too plentiful lubrication. Oil that is too thin, or that is of a poor grade, will cause smoking; good quality oil of the grade recommended by the manufacturer should always be used.

Broken piston rings, or rings stuck in their grooves, will be the cause of smoking because they will permit an excess of oil to pass by them.

CHAPTER XIV

CAUSES OF TROUBLE

Engine will not start.	No mixture. No ignition. No compression.
Engine starts, but will not continue running.	Clogged fuel pipe or strainer. Air-bound tank or carburetor. Clogged exhaust. Wet spark plugs. Governor out of adjustment.
Engine loses power.	Retarded spark. Poor compression. Overheating. Clogged exhaust. Incorrect mixture. Governor out of adjustment. Tight bearings. Dragging brake. Slipping clutch. Overloaded.

Engine stops suddenly.	Ignition trouble.
Engine slows down and stops.	Clogged fuel supply. Incorrect mixture. Overheated.
Regular miss in one cylinder.	Defective spark plug or wire.
Irregular miss in all cylinders.	Sticking contact breaker. Defective distributor. Clogged fuel line. Irregular fuel feed. Water in fuel. Faulty ignition connections.
Engine runs unevenly.	Incorrect spark plug gap. Incorrect mixture. Binding carburetor float. Sticking valves. Sticking governor.
Engine overheats.	Spark retarded. Faulty cooling. Faulty lubrication. Clogged exhaust.

Engine smokes.	Black smoke; mixture too rich. Blue smoke; too much oil. Broken or stuck piston rings. Poor oil.
Engine backfires through carburetor.	Mixture too lean. Sticking inlet valve or weak inlet valve spring.
Explosions in exhaust pipe.	Missing spark. Mixture too rich. Sticking exhaust valve.

INDEX

Adjusting a carburetor, 213
Advance of ignition; theory of, 18
Air cleaner or washer, 71
Air inlet; extra, 63
Armature, 106
Atwater - Kent ignition system, 136
Automatic carburetor, 63
Automobiles and tractors compared, 1
Axles; types of front, 172

Backfire, 55
Balance weights, 31
Bearings, 31
Bosch magneto; theory of, 110
Bosch magneto circuit, 111
Bosch magneto windings, 110
Bull gear drive, 165
Burning point of oil, 182

Cam, 39
Carbon; formation of, 56
Carbonization, 56
Carbon; removing, 242
Carburetor, 57
Carburetor action, 60
Carburetor adjustment, 213
Carburetor adjustment for two fuels, 218
Carburetor; compensating, 63
Carburetor connections, 89
Carburetor; description of, 72
Carburetor; float feed, 76
Carburetor; heating the, 70
Carburetor; parts of, 70
Carburetor; pump feed, 80
Carburetor; stopping on gasoline, 218
Carburetor strainer, 89
Carburetor; trouble with, 215
Carburetor; using water in, 219
Causes of trouble, 259
Centrifugal force, 94
Change speed gear; action of, 152
Change speed gear; jaw clutch, 156
Change speed gear; purpose of, 6
Change speed gear; shifting, 203
Change speed gear; sliding, 154
Change speed gear; theory of, 149

Choke, 67
Circuit; Bosch magneto, 111
Circuit breaker; magneto, 110
Cleaner; air, 91
Clutch; action of, 144
Clutch; expanding, 145
Clutch; how to use, 205
Clutch; plate or disk, 146
Clutch; purpose of, 6
Cold weather care of tractor, 207
Cold weather starting, 207
Combustion space, 11
Combustion; theory of, 52
Compression; importance of, 16
Compression leaks; locating, 228
Compression stroke, 16
Compression; testing the, 227
Connecting rod, 35
Cooling system, 46
Crank shaft, 30
Cycle; gas engine, 11

Dead strokes, 12
Differential; action of, 161
Differential; purpose of, 7
Differential; theory of, 158
Dirt in the fuel, 215
Disk clutch, 146
Distributor; magneto, 124
Dixie magneto action, 119
Double bowl carburetor; adjustment of, 218
Double opposed engine, 25
Drive; master gear or bull gear, 165
Drive; purpose of, 6
Drive; worm, 166

Engine base, 30
Engine; double opposed, 25
Engine; horizontal, 25
Engine; how power is delivered by, 21
Engine loses power, 249
Engine misses, 252
Engine overheats, 256
Engine; priming, 214
Engine; principle of, 9
Engine; purpose of, 6
Engine smokes, 258
Engine starts; but stops, 254
Engine stops, 251
Engine trouble; locating, 246
Engine; vertical, 25
Engine will not start, 246
Exhaust stroke, 20
Exhaust valve, 38
Expanding clutch, 145
Extra air inlet, 63

Firing order, 28
Float feed carburetor, 76
Force feed oiling system, 186
Frame; purpose of, 8
Freezing; to prevent, 209
Front axles; types of, 172
Fuel; dirt in the, 215
Fuel; straining the, 89

Gas engine cycle, 11
Gasket, 30
Gasoline mixture, 57
Governor, 94
Grease cup, 197
Grease; when used, 182
Grinding valves, 229
Grounded circuit or ground return, 125

Heat; action of, 9
Heat; effect on oil of, 177
Heat necessary in forming mixture, 58
Heating the carburetor, 70
Heating the mixture, 86
Horizontal engine, 25

Ignition point; changing the, 103
Ignition system; Atwater-Kent, 136
Ignition system; parts of, 105
Ignition; theory of, 17, 102
Impulse starter, 128
Induction and induced current, 106
Inductor magneto, 115
Inlet stroke, 14
Inlet valve, 38

Jack shaft, 165
Jaw clutch change speed gear, 156

K-W magneto action, 115
Kerosene mixture, 57

Leaks of compression; locating, 228
Lean mixture, 54
Loading, 67
Lubricating systems, 184
Lubrication chart; use of, 182
Lubrication; importance of, 175

Magnetism, 105
Magnet; poles of, 106
Magneto action; Bosch, 110
Magneto action; Dixie, 119
Magneto action; K-W, 115
Magneto distributor, 124
Magneto distributor; cleaning, 222
Magneto inductor, 115
Magneto; oiling a, 221
Magneto platinum points; care of, 221
Magneto safety spark gap, 127
Magneto spark; theory of, 105
Magneto; theory of Bosch, 110
Magneto timer or circuit breaker, 110
Magneto timing, 223
Magneto trouble; testing for, 224
Manifold, 70
Master gear drive, 165
Mechanical oiler, 192
Mixer, 57
Mixing chamber, 70
Mixture changes with engine speed, 62

Mixture; formation of, 53
Mixture; gasoline and kerosene, 57
Mixture; heating the, 86
Mixture; heat necessary to form, 58
Mixture; rich, 55
Mixture; theory of, 9
Mixture; thin, or lean, 54

Oil affected by heat, 177
Oil; burning point and viscosity, 182
Oil cup, 193
Oiler; mechanical, 192
Oiling chart; use of, 182
Oiling; importance of, 175
Oiling systems, 184
Oil pump, 188
Oil; varieties used on tractors, 179

Piston, 34
Piston pin, 34
Piston rings, 37
Piston rings; care of, 228
Plate clutch, 146
Poles of magnet, 106
Power diagram, 21
Power production, 12
Power stroke, 19
Preignition, 56, 83, 104
Priming the engine, 214
Pump feed carburetor, 80
Push rod, 42
Push rod adjustment, 234

Radiator, 48
Retard of ignition; theory of, 19
Rich mixture, 55
Rocker arm, 42

Safety spark gap, 127
Shuttle armature, 107
Sliding change speed gear, 154
Spark coil; principle of, 133
Spark coil; vibrator, 138
Spark coil; windings of, 134
Spark plug, 140
Spark plug gap, 226
Spark plugs; trouble with, 225
Splash oiling system, 184
Spray nozzle, 57
Spring support, 173
Starter; impulse, 128
Starting in cold weather, 207
Starting the engine; theory of, 13
Steering gear; purpose of, 7
Steering; instruction in, 205
Storing a tractor, 210
Straining the fuel, 89
Strangler, 69

Tappet, 42
Tappet adjustment, 234
Temperature; effect of changes on mixture, 66
Testing for magneto trouble, 224

Testing the compression, 227
Theory of gas engine, 9
Thermo-syphon cooling system, 48
Thin mixture, 54
Throttle, 68
Throws of crank shaft, 30
Timer; magneto, 110, 121, 122
Timing a magneto, 223
Timing the valves, 237
Tractor; caring for in cold weather, 207
Tractor; difficulties in oiling, 178
Tractor driving, 205
Tractor; handling a new, 201
Tractor inspection, 203
Tractors and automobiles compared, 1
Tractor; storing, 210
Tractor types, 167
Transmission; parts of, 143
Trouble; causes of, 259
Trouble; locating, 246

Valve; exhaust, 38
Valve grinding, 229
Valve; inlet, 38
Valve mechanism, 42
Valve operation, 39
Valve seat; redressing, 234
Valve timing, 237
Vertical engine, 25
Vibrator coil, 138
Viscosity of oil, 182

Washer; air, 91
Water added to mixture, 58, 83, 219
Water jackets, 48
Windings; Bosch magneto, 110
Windings of spark coil, 134
Worm drive, 166
Wrist pin, 34

THIS BOOK IS DUE ON THE LAST DATE
STAMPED BELOW

DEC 20 '82

OCT 18 '83

RENEWED BOOKS ARE SUBJECT TO IMMEDIATE
RECALL

LIBRARY, UNIVERSITY OF CALIFORNIA, DAVIS

Book Slip—50m-12,'64(F772s4)458

361398

TL233
W5

Whitman, R.B.
Tractor principles.

PHYSICAL
SCIENCES
LIBRARY

3 1175 00674 5023

LIBRARY
UNIVERSITY OF CALIFORNIA
DAVIS